ELECTRIC VESION MANUAL

OVERVIEW 產品概要

Components
內容物

Transmitter
遙控器

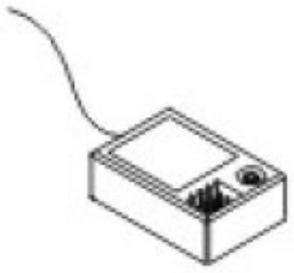

Receiver
接收器

Servo
伺服機

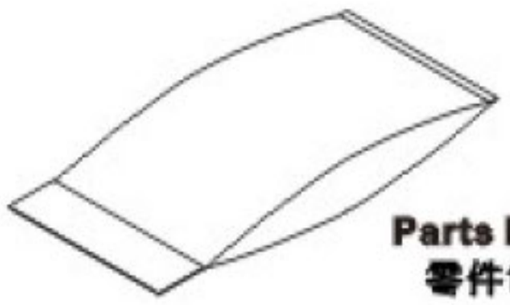

Parts Bag
零件包

Instruction Manual
組裝說明書

Sticker
貼紙

Radio Control Car
遙控車

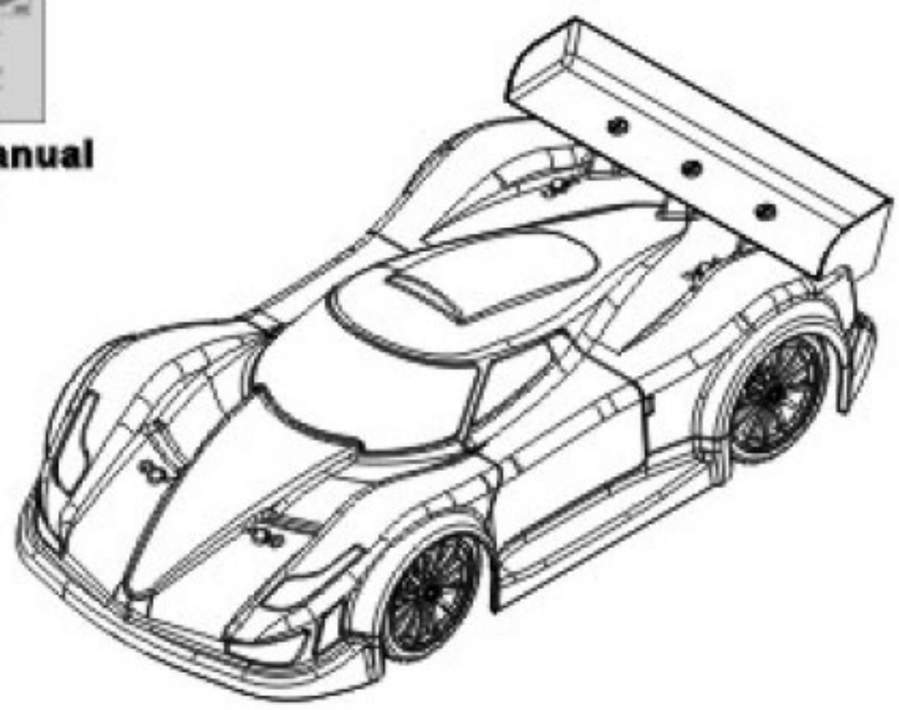

Included Items
附帶工具

Turnbuckle Wrench
六角板手

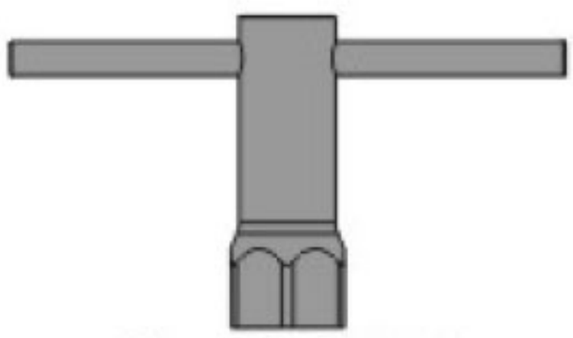

17mm Wheel Nut Tool
輪胎拆除六角板手

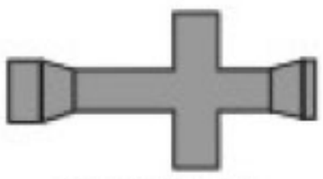

Cross Wrench
六角起子

TOOLS NOT INCLUDED IN THE KIT
需使用之工具 (另購)

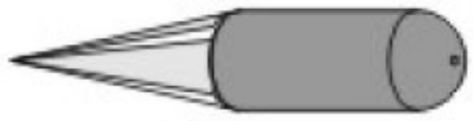

Body Reamer
車殼鑽孔器

Screw Cement
螺絲膠

Instant Cemment
3秒瞬間膠水

Curved Scissors
彎頭剪刀

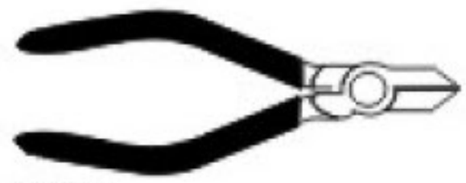

Cutter
斜口鉗

Gear Grease
齒輪潤滑油膏

Craft Knife
美工刀

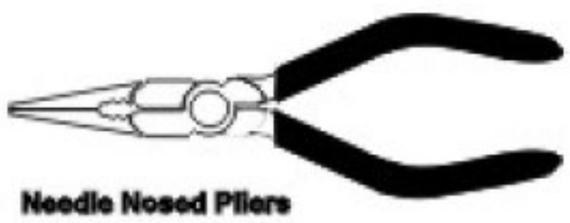

Needle Nosed Pliers
尖嘴鉗

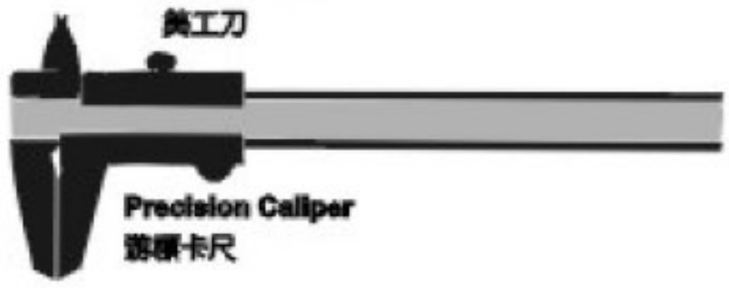

Precision Caliper
游標卡尺

Equipment Needed
另購品

UM-3 Batteries
(8pcs)
3號乾電池（8顆）

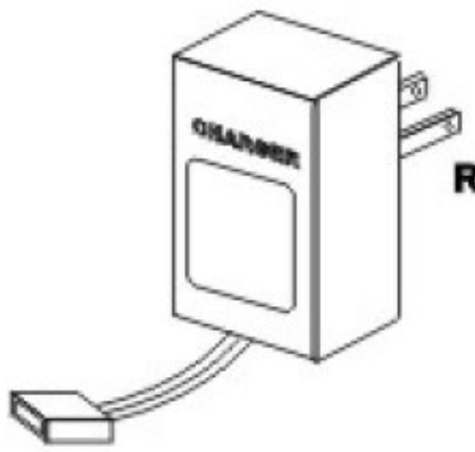

5 cell/6Volt NI-Mh
Receiver Battery Charger
5顆裝6伏特
平式接收機電池充電器

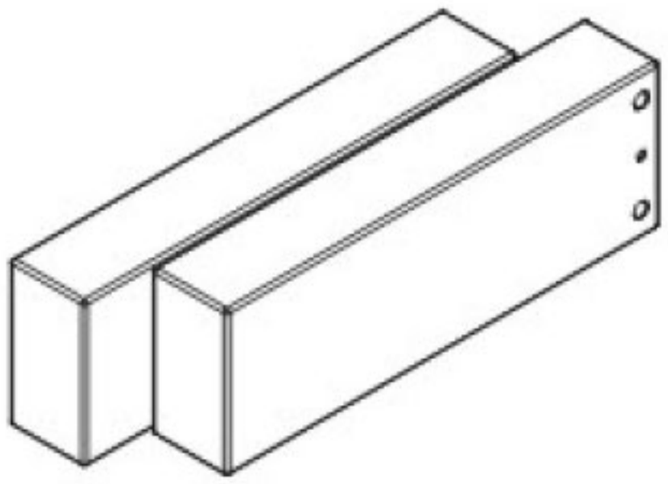

7.4V LI-Po Battery(Hard Case)
7.4V 鋰充電電池組(硬殼)

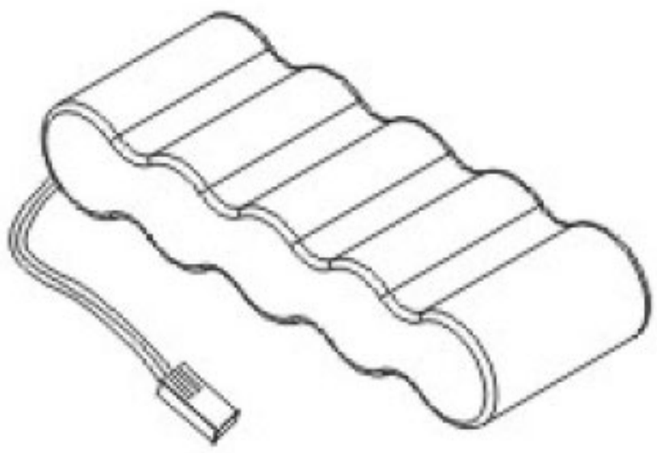

5 cell/6Volt NI-Mh
Receiver Battery
5顆裝6伏特
平式接收機電池

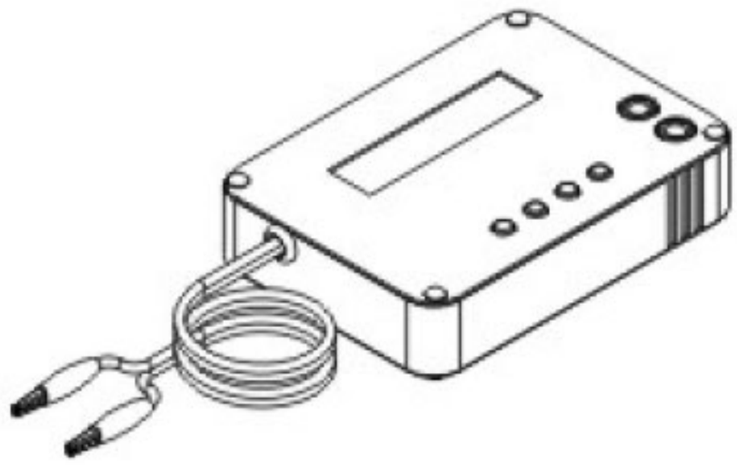

Li-Po Battery Charger
鋰電池專用充電器

IMPORTANT-READ THIS BEFORE RUNNING
重 要 ！ 操 作 前 請 先 閱 讀

1.Before Starting
啟動前

◎Please read manual carefulyl (With a parent, guardian or a responsible adult if necessary).
請仔細閱讀說明書,(如有必要，須有家長，監護人，或其他成年人陪同)。

2.While Operating
當操作時

◎Any running area you choose must be dry. Do not run vehicler near any water or wet areas.
請在乾地上操控車子，並請勿操控車子於水池或溼地旁。

◎Do not run on public streets. It is very easy to have the car run over or be damaged by hitting the curb.
勿在大街上操控車子，因為它很容易被行駛中的車輛輾過或碰撞而有所損傷。

◎Do not operate the car in tight confined places. The vehicle is very fast and will easily hit something.
勿在空間狹窄的地方操作；因為它的速度快很容易碰撞周圍物件。

◎Do not run near people or animals. The car is very fast and could easily hit someone if you are not an expert driver.
勿操作車子於人群或動物旁；如您不是專業人士操作，他們都可能發生危險。

◎Do not operate the car at night. You will not be able to drive it safely.
勿在晚上操作模型車，因可能視線不佳而導致它發生碰撞。

3.Before Operating
操作前檢查

◎Make sure that all screws and nuts are properly tightened.
確認螺絲與螺帽有無鬆動。

◎Always use fresh batteries for your transmitter and receiver before running the car. If the radio does not have full control of the car with steering, throttle and brake. Do not run it until corrected. Failure to correct this will result in possible injury and damage to the car or property.
We strongly recommend using a failsafe.
操作前請先換上全新的電池，如果電量不足時，將不能完全控制車子的油門及剎車或行進方向。此刻請立即停駛，並換上全新電池。如果不立即改善，可能將導至失控而使人體受傷或車子受損。我們極力建議裝配"防失控裝置"在您的車上。

◎Please confirm the steering and throttle is at neutral position.
請確認油門位於中立點位置。

4.Check Your Vehicle After Runing
操作後注意事項

◎Turn OFF receiver first, then turn OFF transmitter. This will prevent the car from losing control.
先關閉接收機電源，再關閉遙控器電源，如此以避免遙控車失控產生爆衝。

◎After running radio controlled car, it is necessary to perform routine maintenance.
遙控車跑完之後需要進行保養。

5.Battery Safety
電池安全

◎Please be careful when handling the battery. It will be hot after running. If the wire is frayed, a short circuit can cause a fire.
操作後電池將會發燙，取出電池時請小心。如果電池電線磨損，短路將會導致電池起火燃燒。

WARNING: To avoid a possible fire hazard, always unplug the battery. Do not leave your vehicle unattended with the battery unplugged.

警　告
為避免因電線短路而引起之可能災害，請在操作本產品後，隨時拔除電源接頭。
請勿在電源接頭未經拔除之下將本遙車產品儲存或置於無法目視的地方。

1 ASSEMBLY OF THE ONE SPEED TRANSMISSION
單段變速器組合

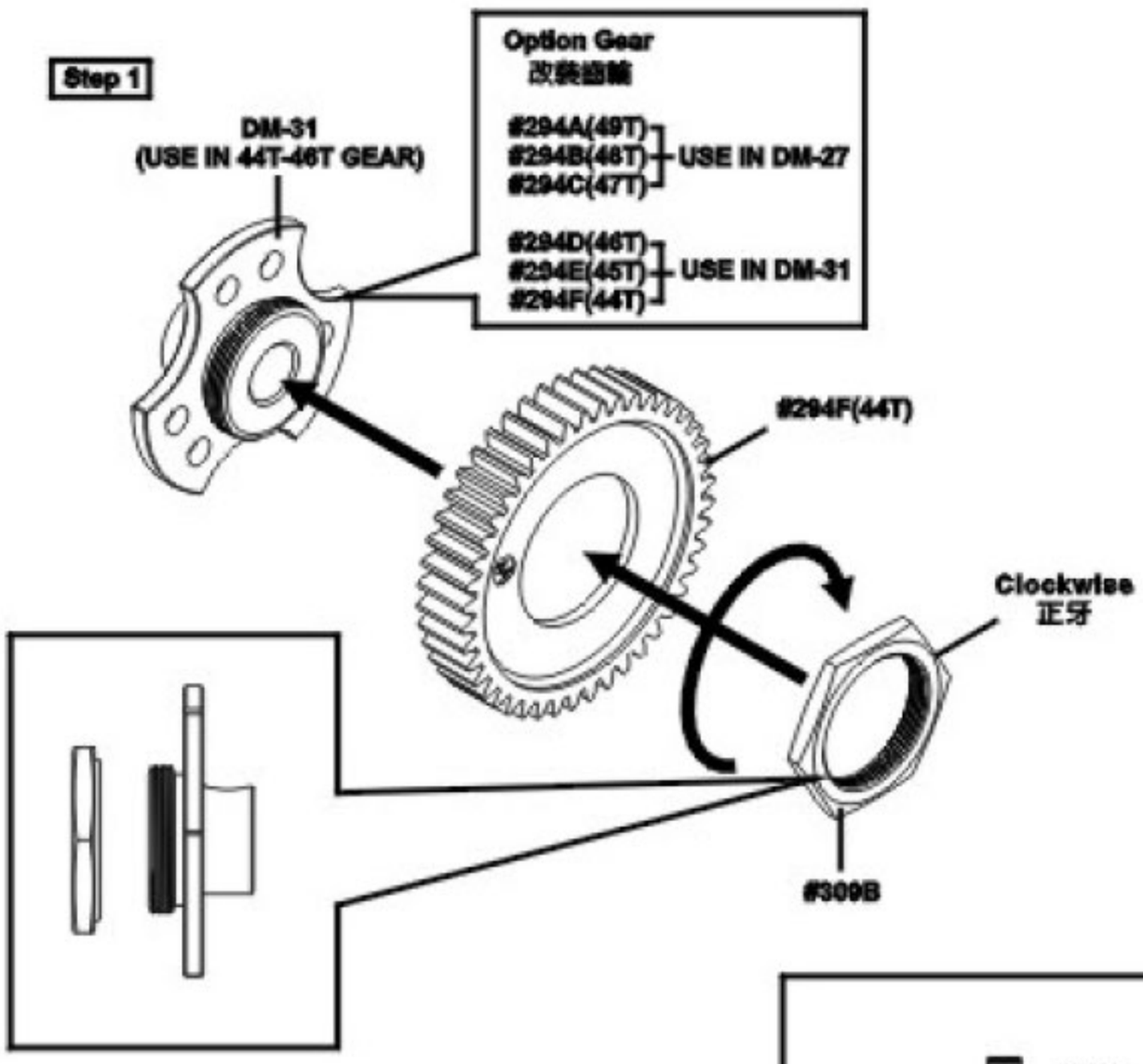

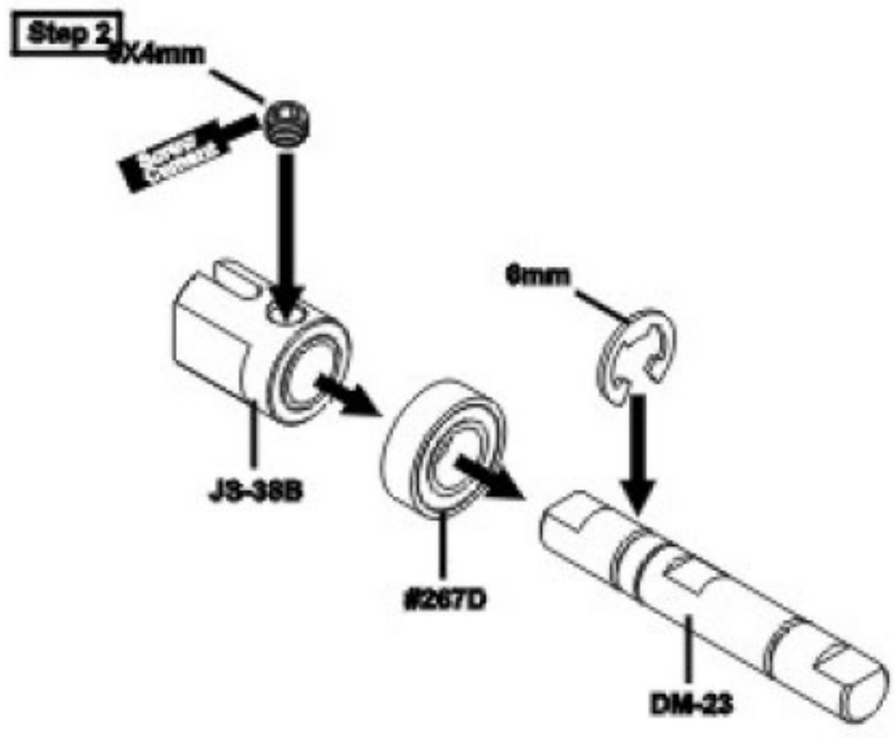

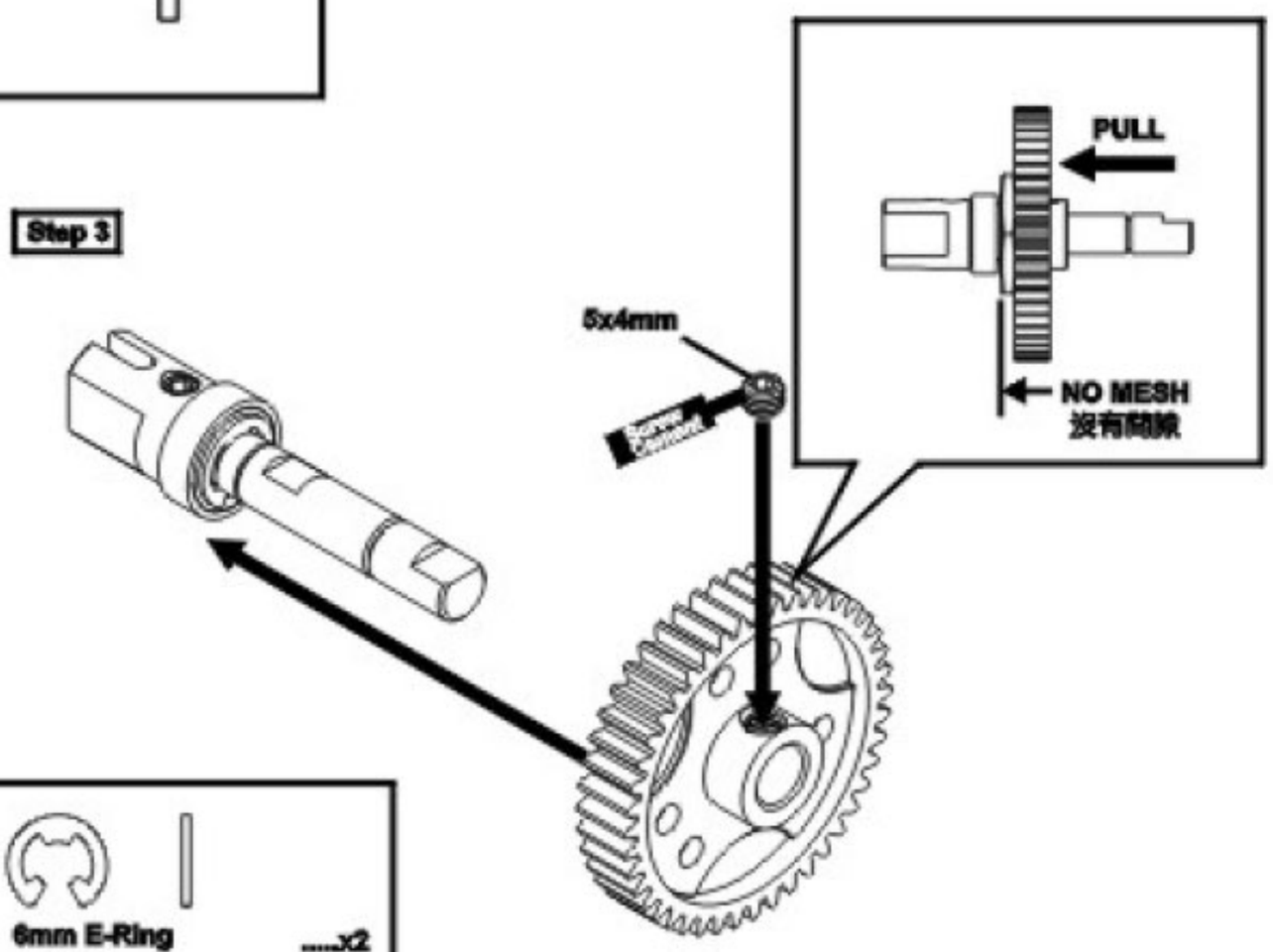

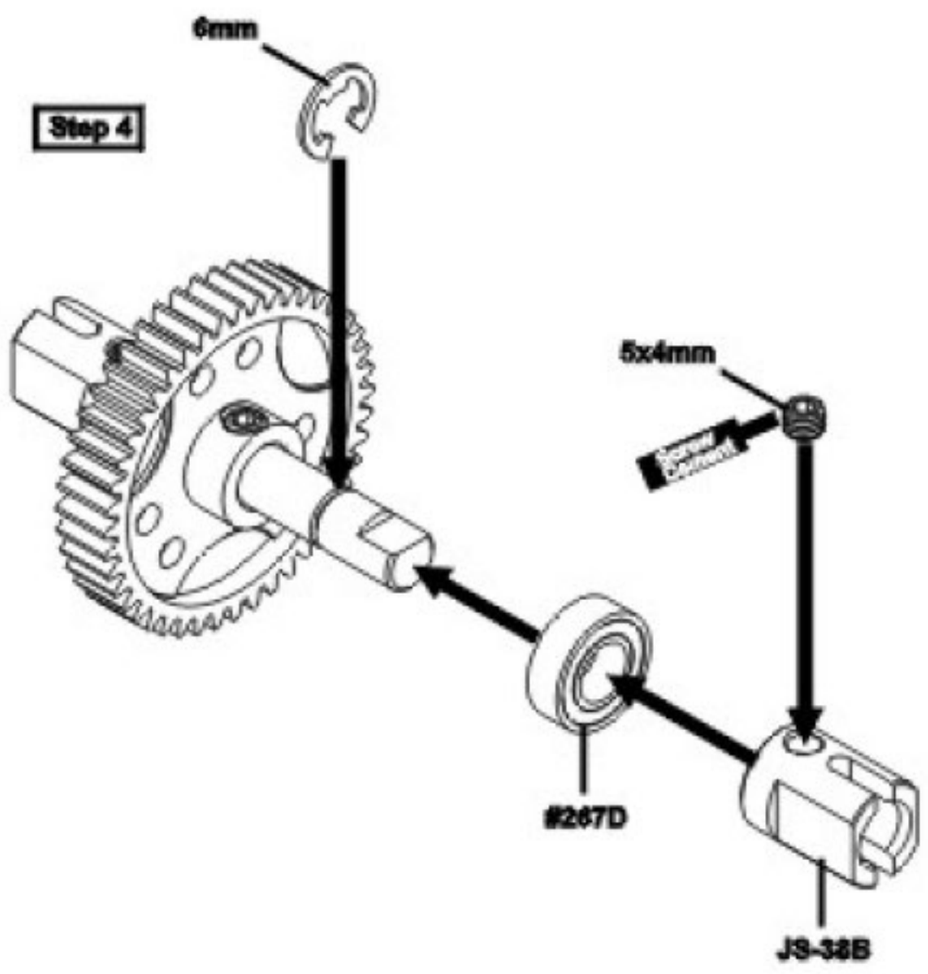

2 ASSEMBLY OF THE CENTER DIFF. MOUNT
中差座組合

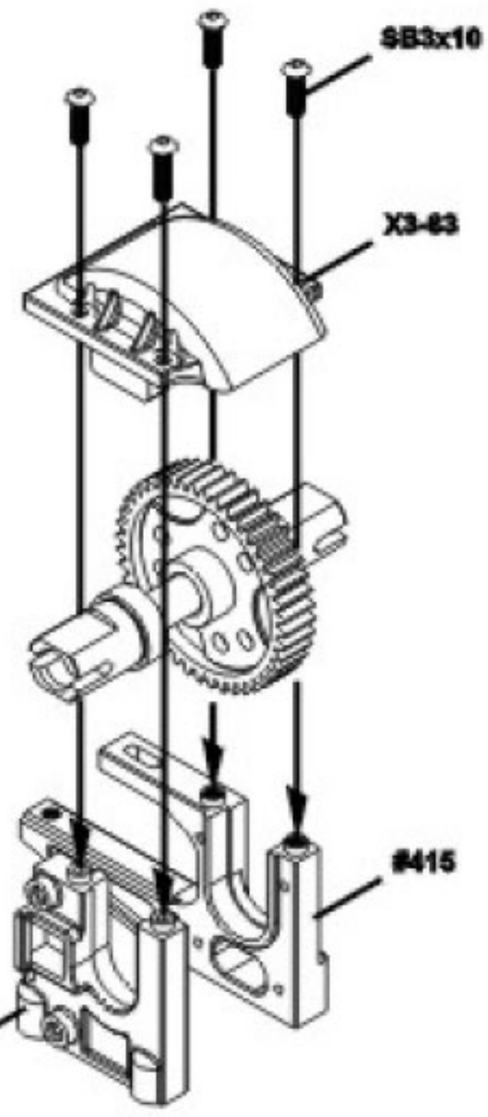

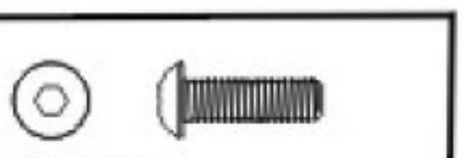

3 ASSEMBLY OF THE FRONT GEAR CASE ONTO CHASSIS
組合前齒輪箱至底盤

SF3x10mm
Flat Head Hex Screw x4
皿頭內六角螺絲

SF4x12mm
Flat Head Hex Screw x2
皿頭內六角螺絲

SNN3mm
Nylon Nut x2
尼龍螺帽

Step detail
步驟細節

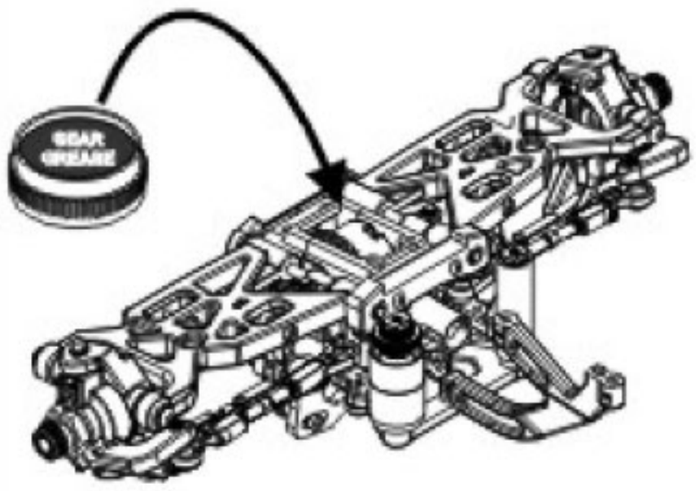

Fill the right amount of grease.
添加適量的潤滑油。

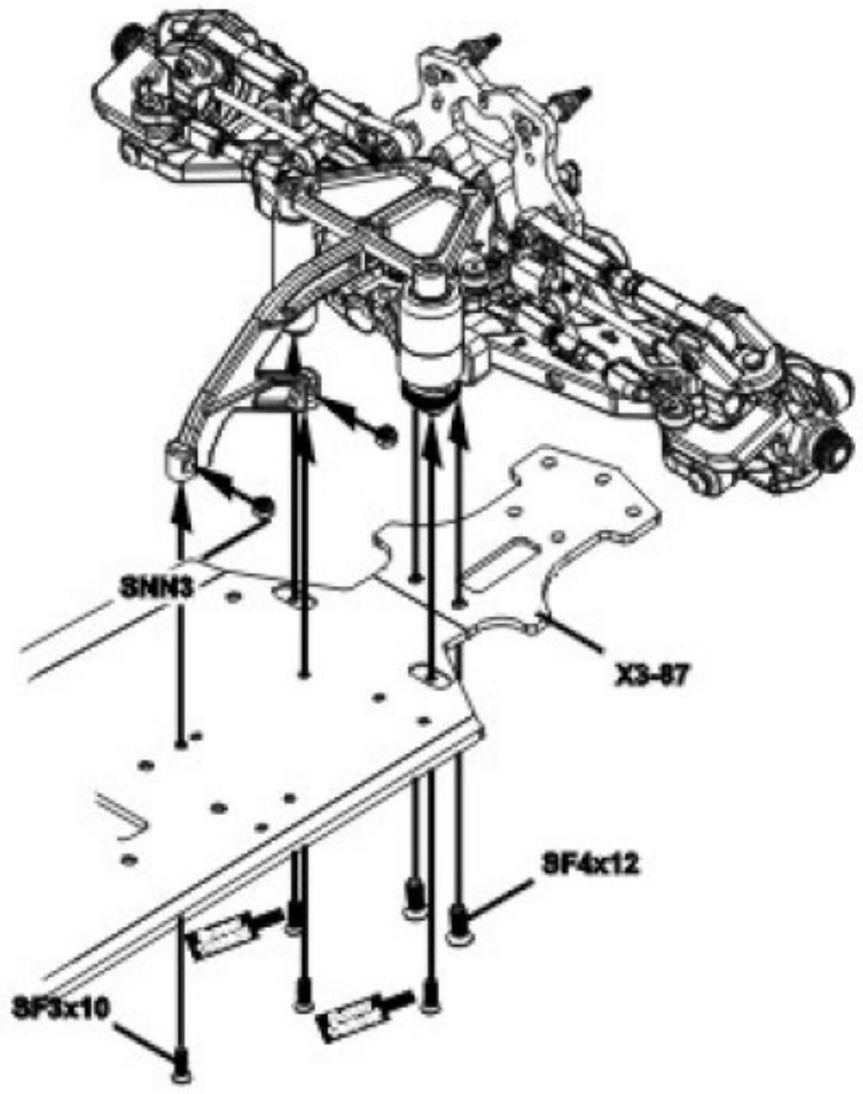

4 ASSEMBLY OF THE REAR GEAR CASE ONTO CHASSIS
組合後齒輪箱至底盤

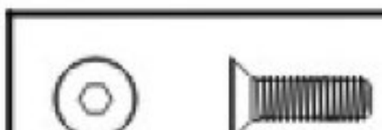

SF3x10mm
Flat Head Hex Screw x2
皿頭內六角螺絲

SF4x12mm
Flat Head Hex Screw x2
皿頭內六角螺絲

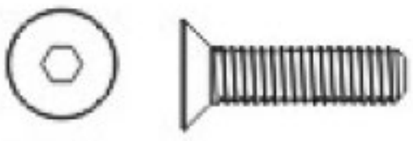

SF4x16mm
Flat Head Hex Screw x2
皿頭內六角螺絲

SNN3mm
Nylon Nut x2
尼龍螺帽

Step detail
步驟細節

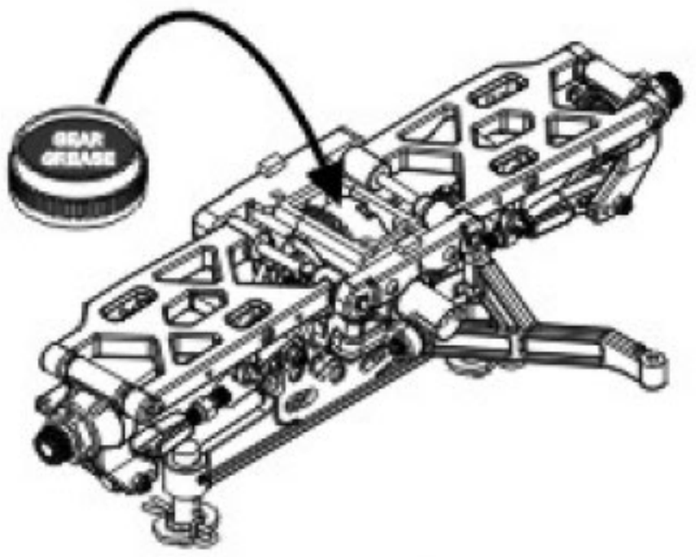

Fill the right amount of grease.
添加適量的潤滑油。

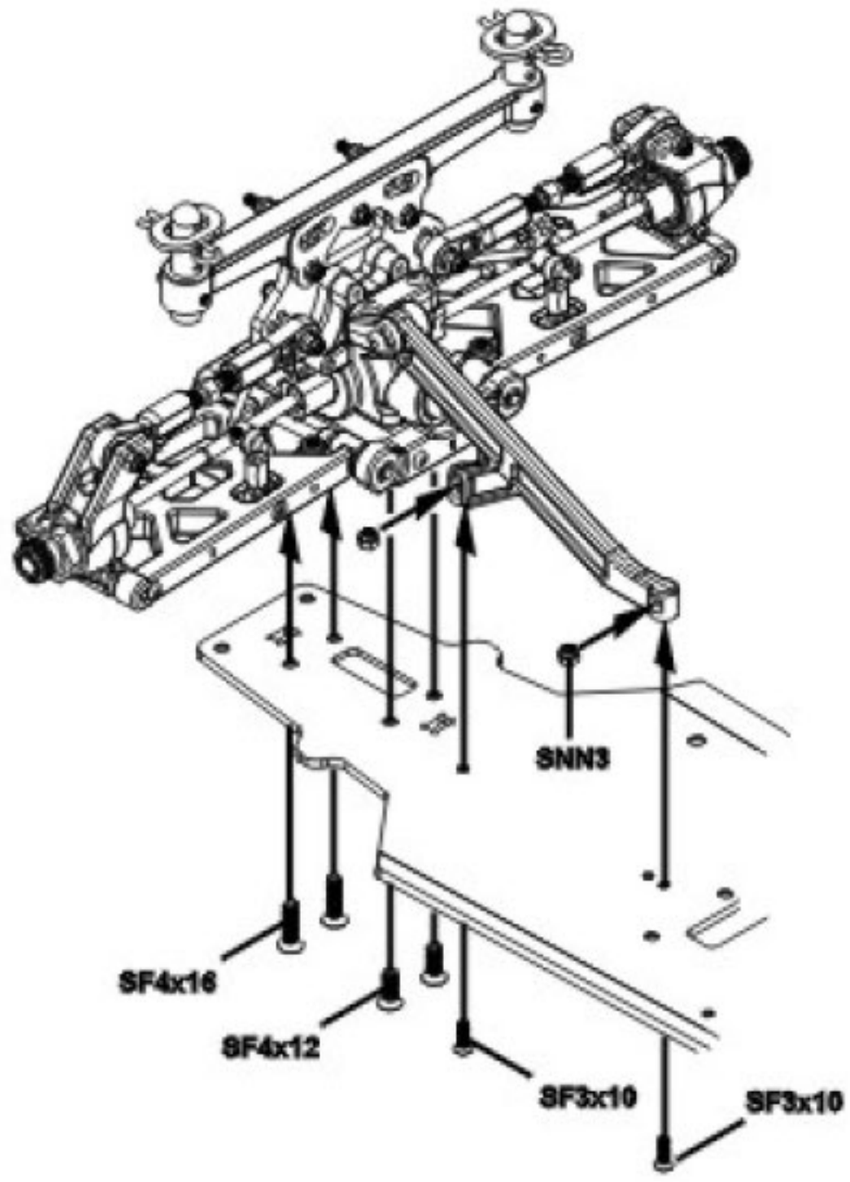

5 ASSEMBLY OF THE CENTER DIFF. ONTO CHASSIS
組合中差座至底盤

*Insert the front and rear drive shaft into cap joint before assembly.
*組合前請先將傳動軸放入接杯內。

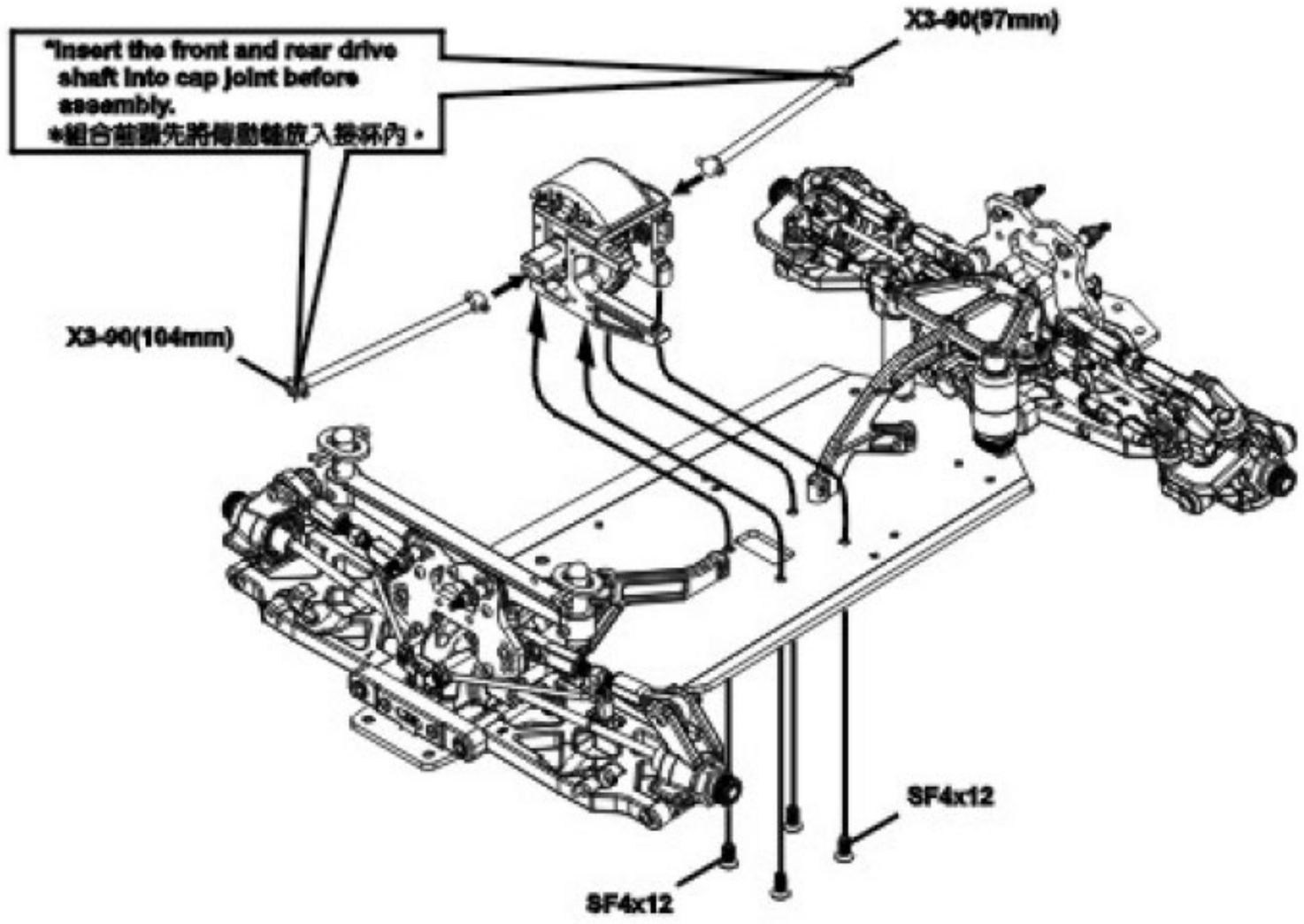

SF4x12mm
Flat Head Hex Screw x4
皿頭內六角螺絲

6 ASSEMBLY OF THE MOTOR MOUNT
馬達座組合

SS4x4mm
Set Screw x1
止付螺絲

SF3x10mm
Flat Head Hex Screw x2
皿頭內六角螺絲

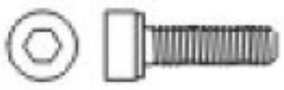

SC3x10mm
Cap Screw x2
有頭內六角螺絲

SW3x8X0.8mm
Washer x2
墊片

Step 1

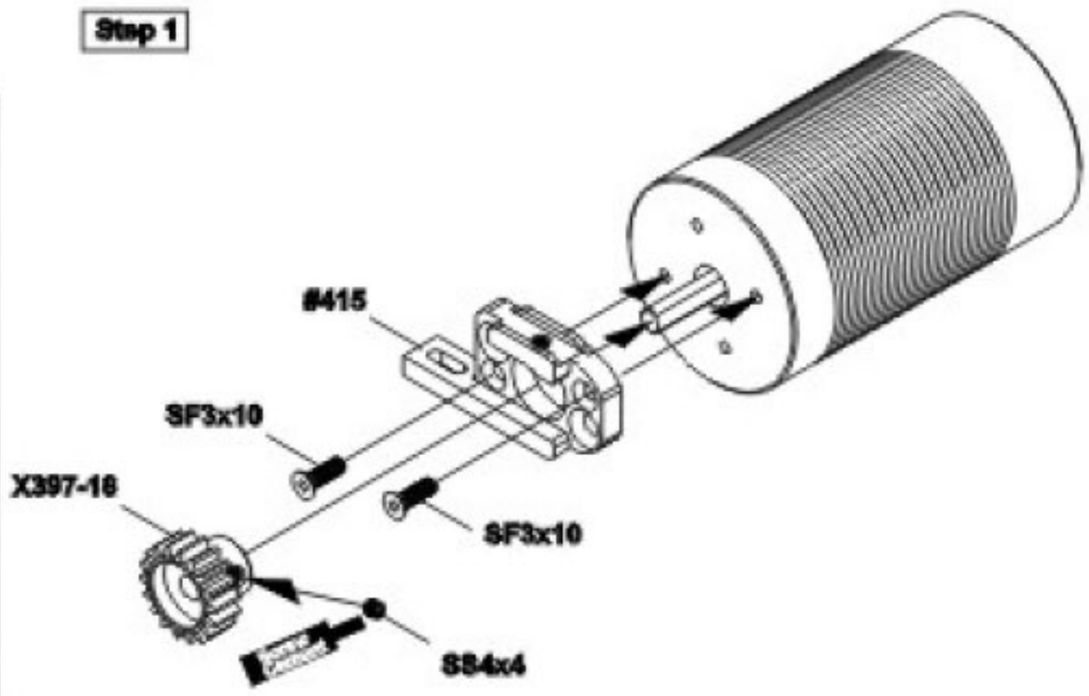

Option Gear
改裝齒輪

#397-13(13T)
#397-14(14T)
#397-15(15T)
#397-16(16T)
#397-17(17T)
#397-18(18T)

Step 2

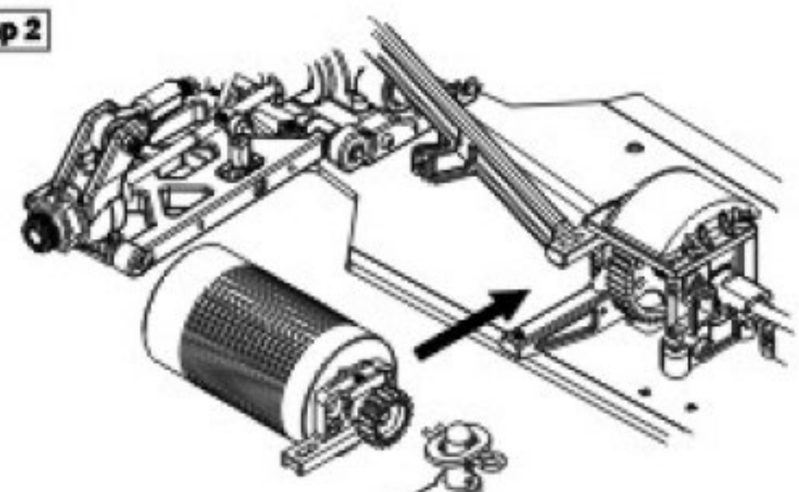

Step 3

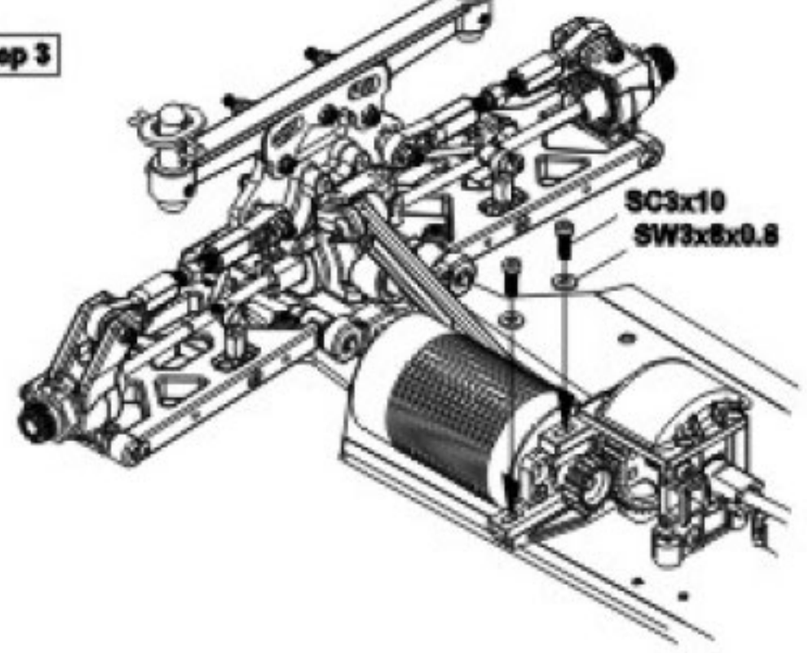

7 ADJUST MOTOR AND SPUR GEAR MAINTENANCE
調整馬達與大直齒距離

EXTREMELY IMPORTANT 非常重要

Step 1

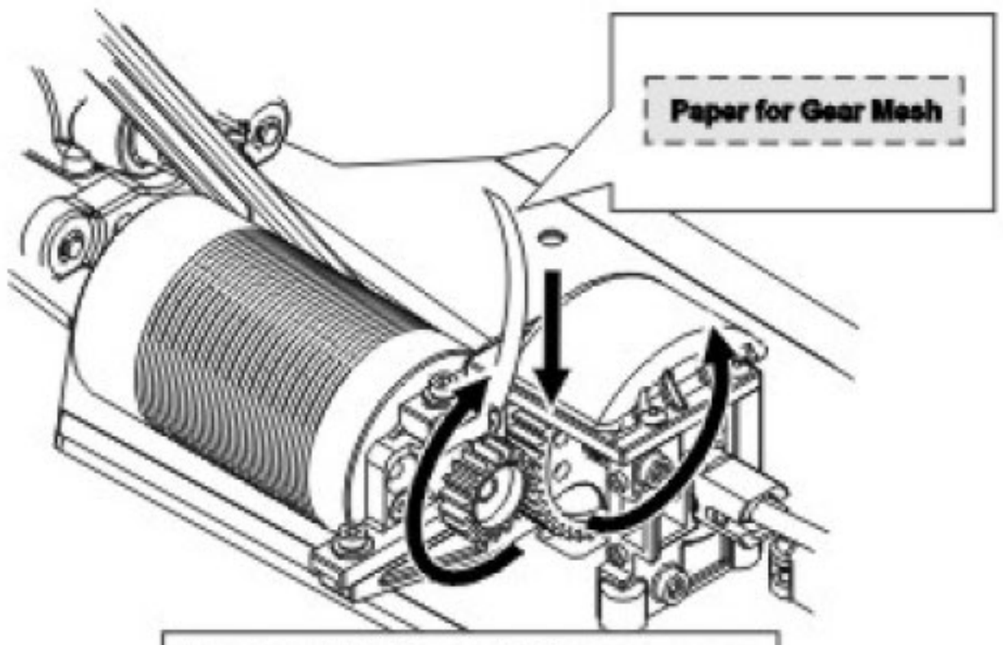

Insert a notebook paper between spur gear and motor gear to make correct gear mesh.
插入一張筆記本紙在大直齒和馬達齒之間取得正確齒輪間隙。

Step 2

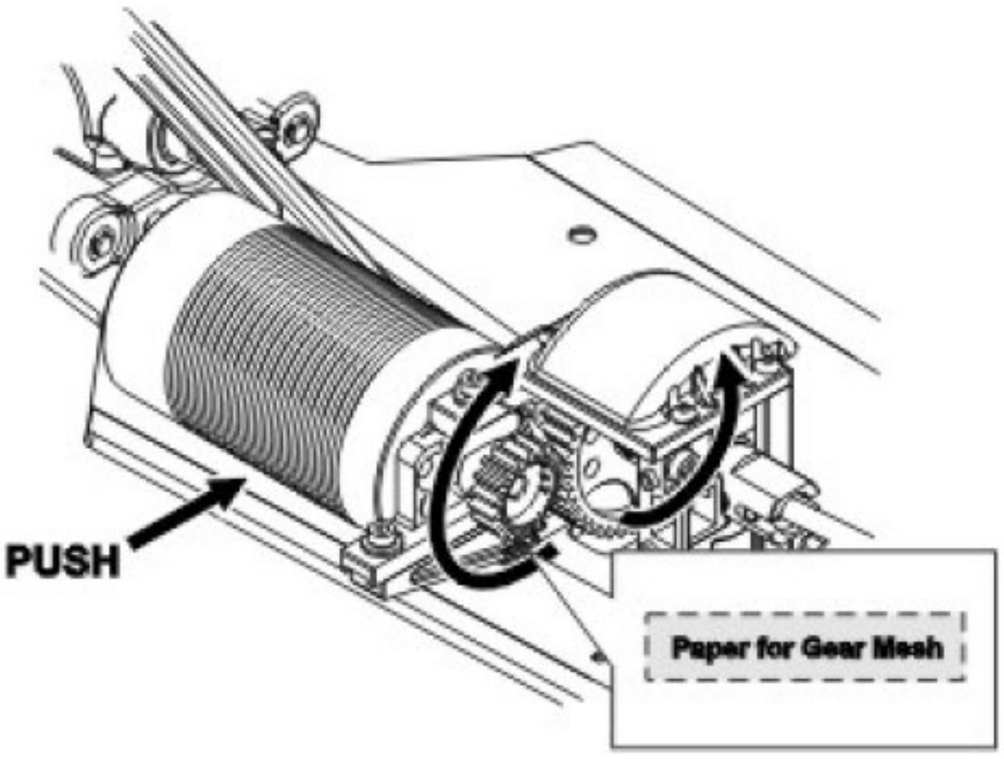

Step 3

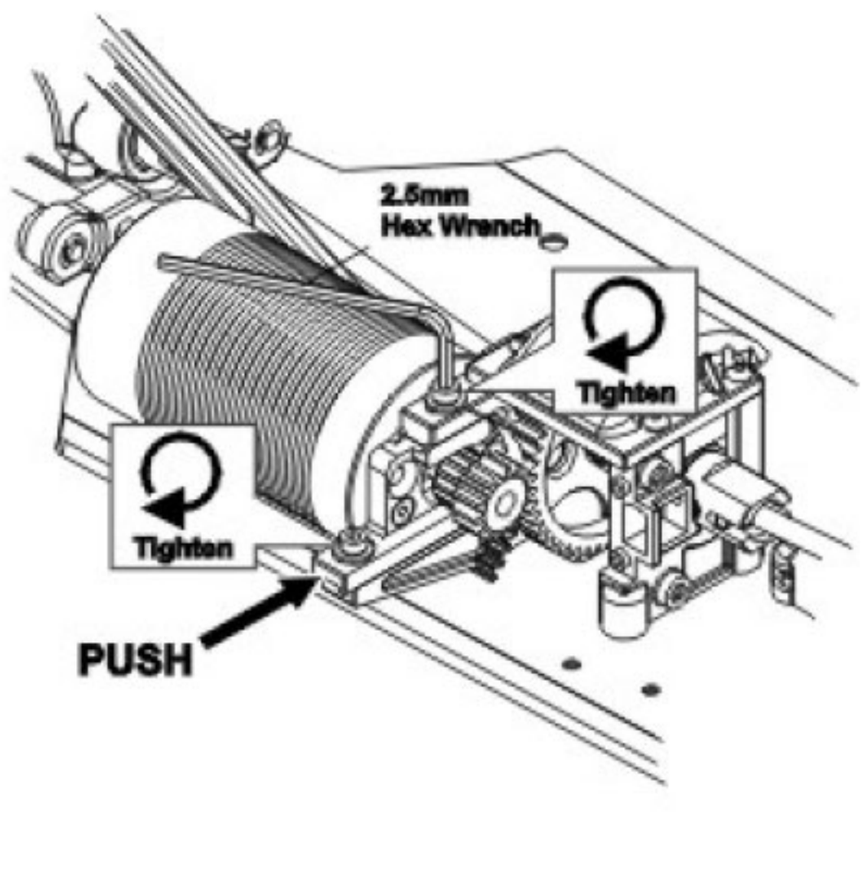

Step 4

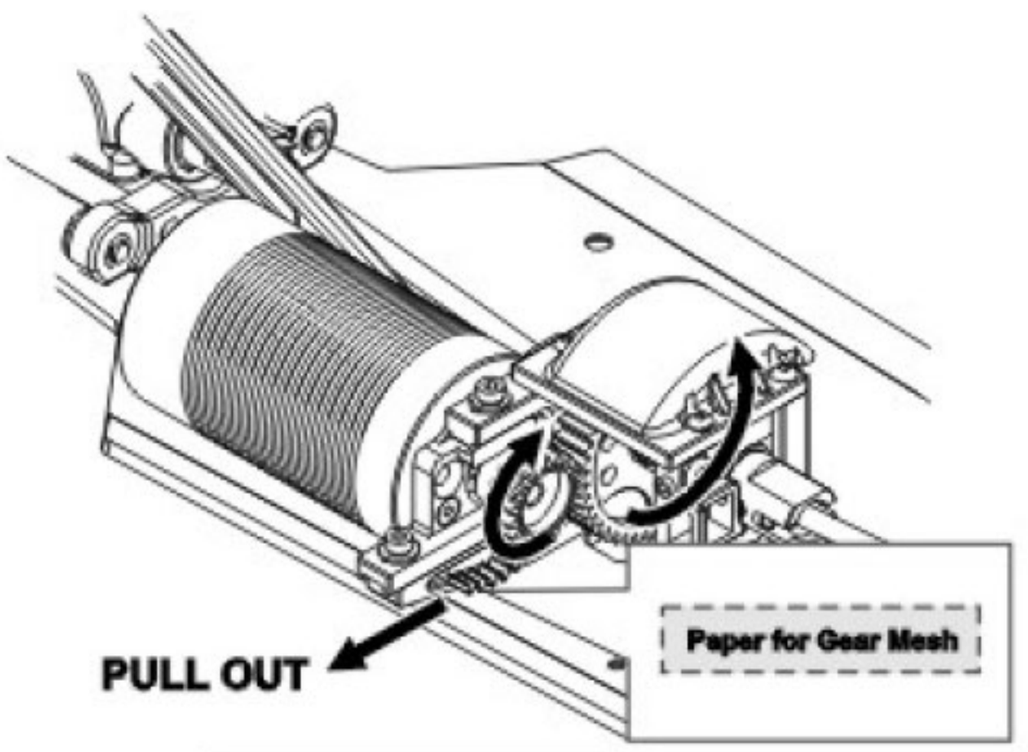

- Adjust the motor mount position to get proper gear mesh.
  調整馬達座位置取得齒輪間隙。
- To get a perfect gear mesh , place a piece of notebook paper between the gears and tighten the motor mount screws.
  要取得完美的齒輪間隙，需放置一張筆記本紙在齒輪之間並鎖緊馬達座螺絲。
- The spur gear may be damaged if the gear mesh is not correct.
  如果齒輪間隙不正確會導致大直齒損壞。

8 ASSEMBLY OF THE VELCRO BATTERY STRAPS INTO BATTERY CASE
組合魔術粘束帶至電池盒

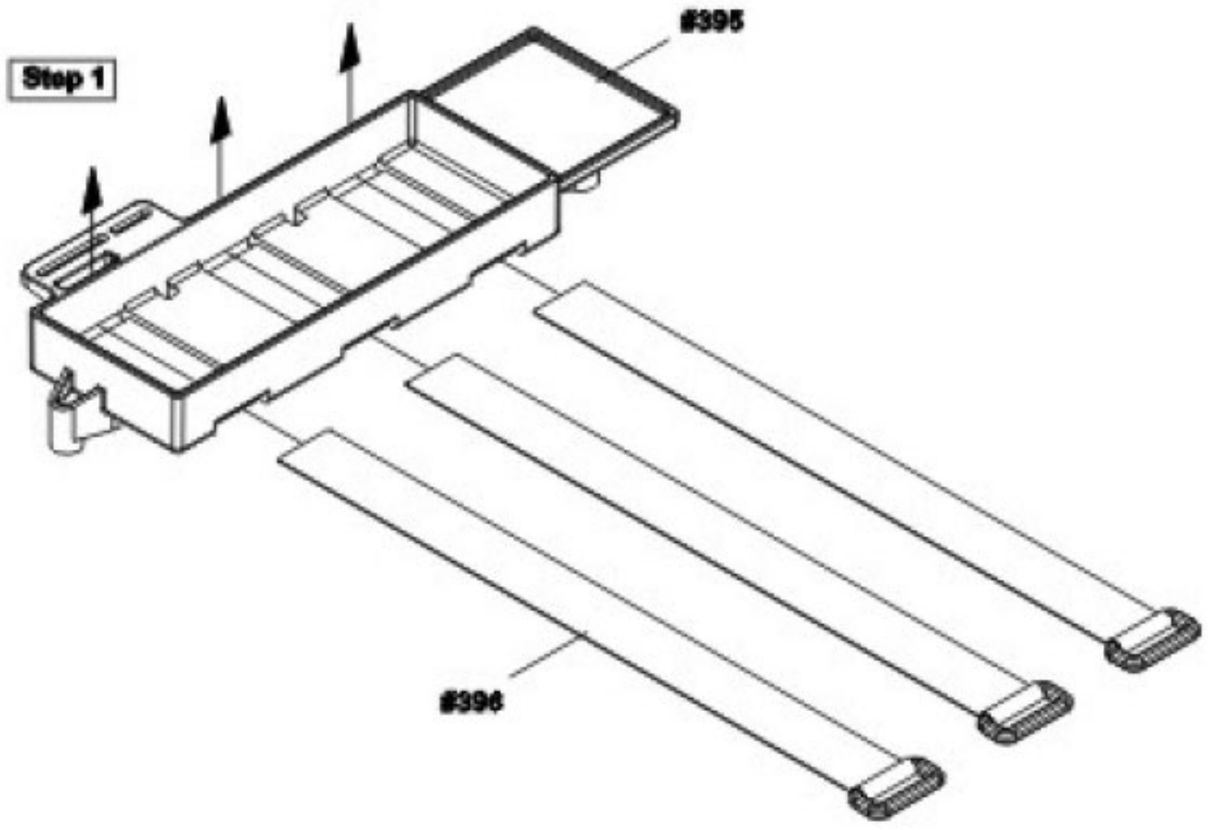

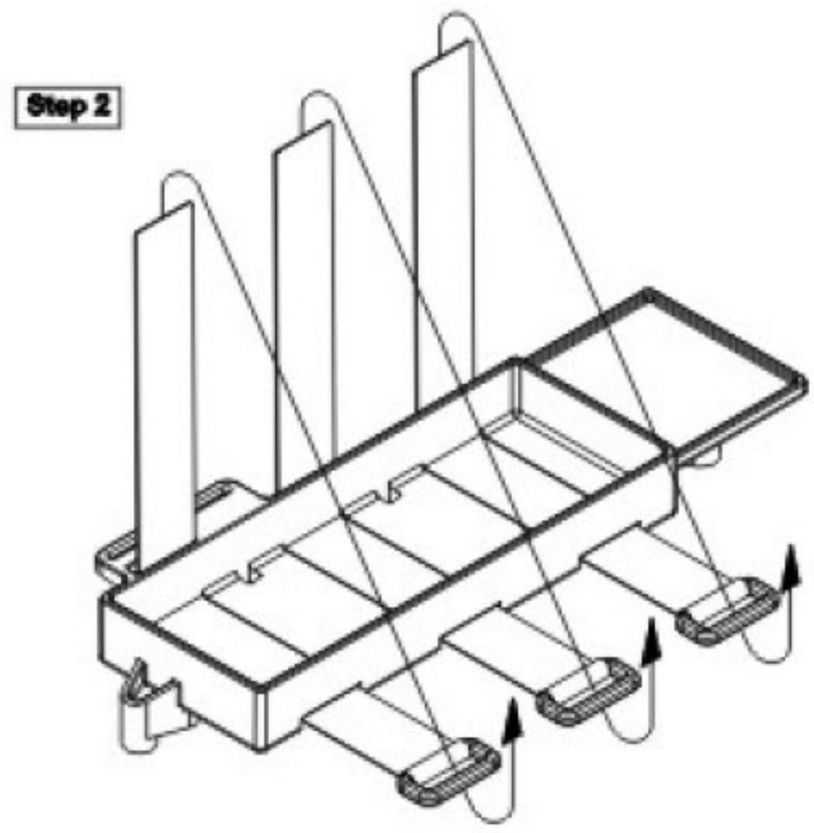

9 ASSEMBLY OF THE ELECTRIC SPEED CONTRTOL
組合電子變速器至電池盒

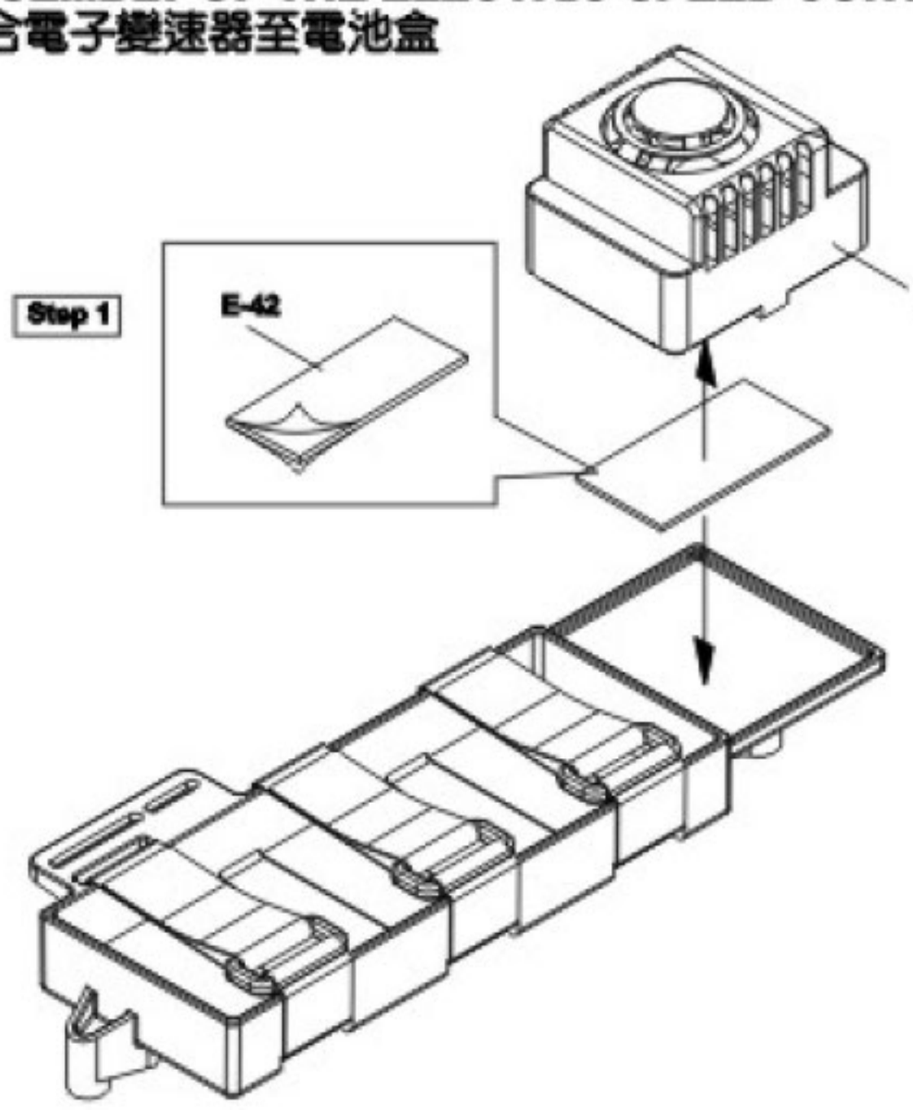

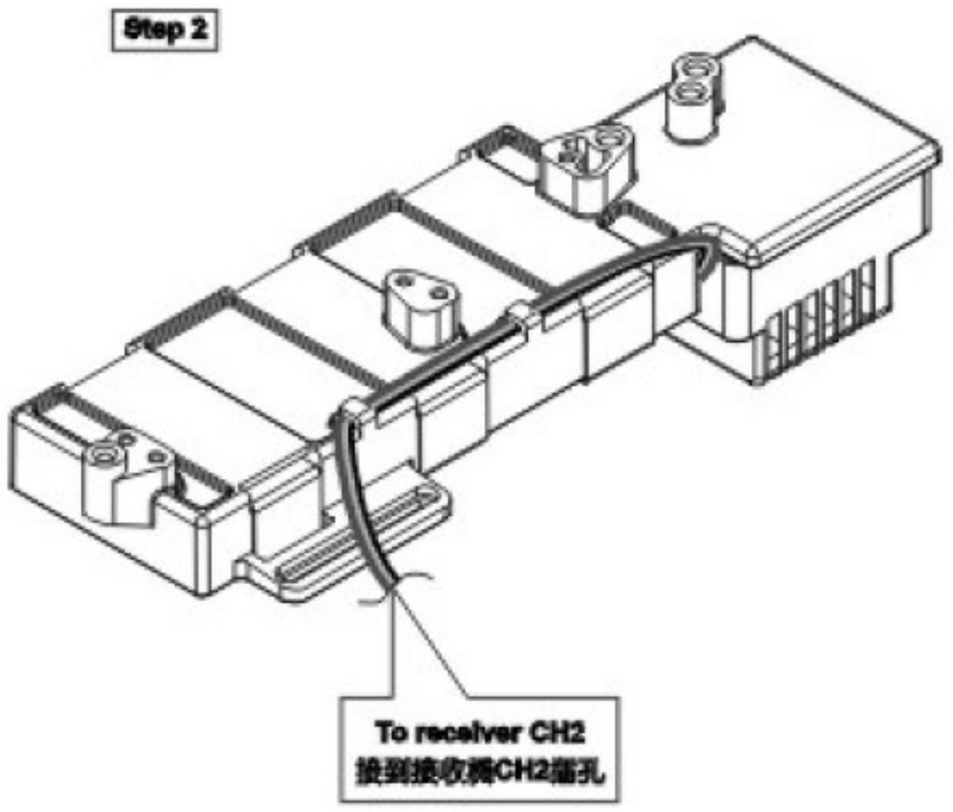

10 ASSEMBLY OF THE STEERING SERVO ONTO RADIO CASE
組合轉向伺服機至接收機盒

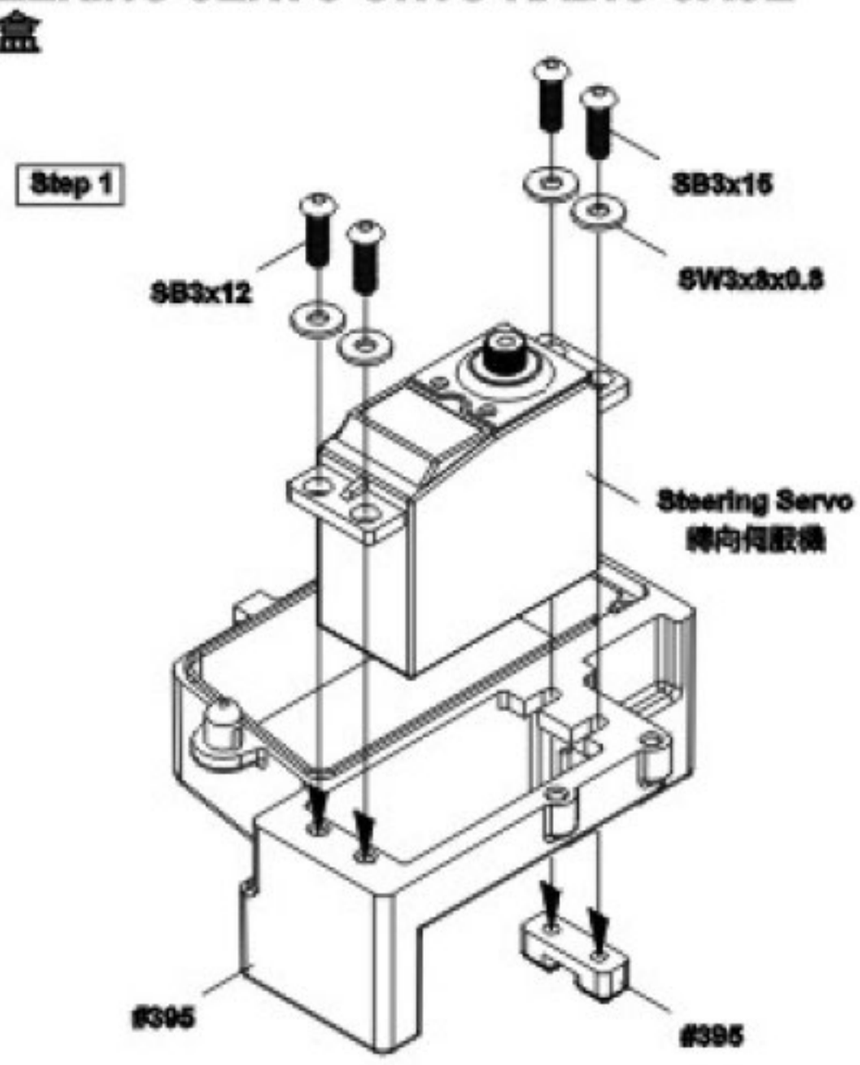

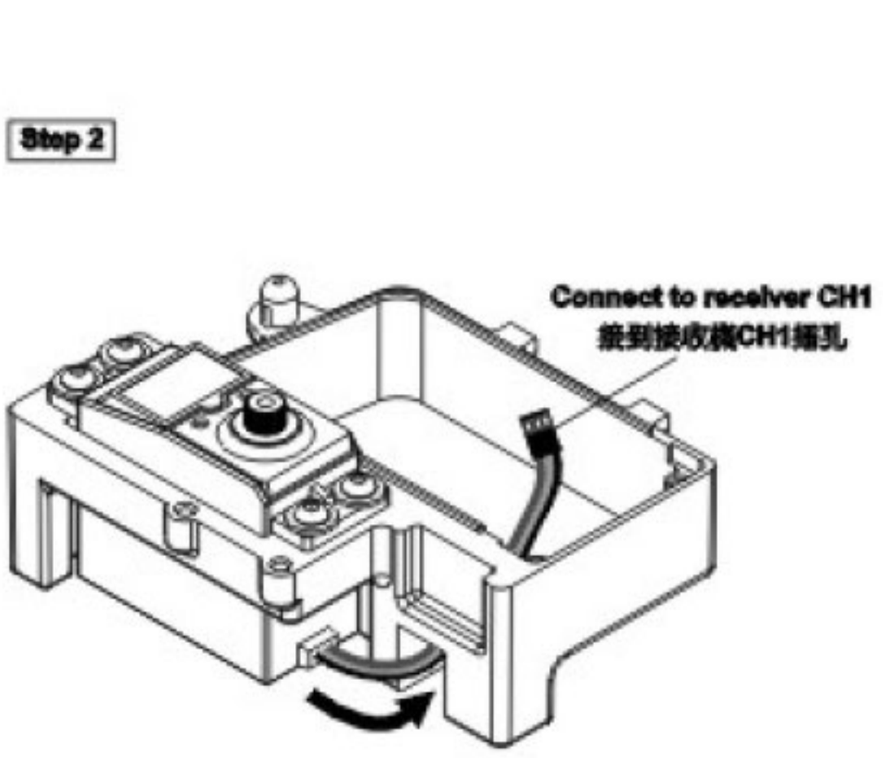

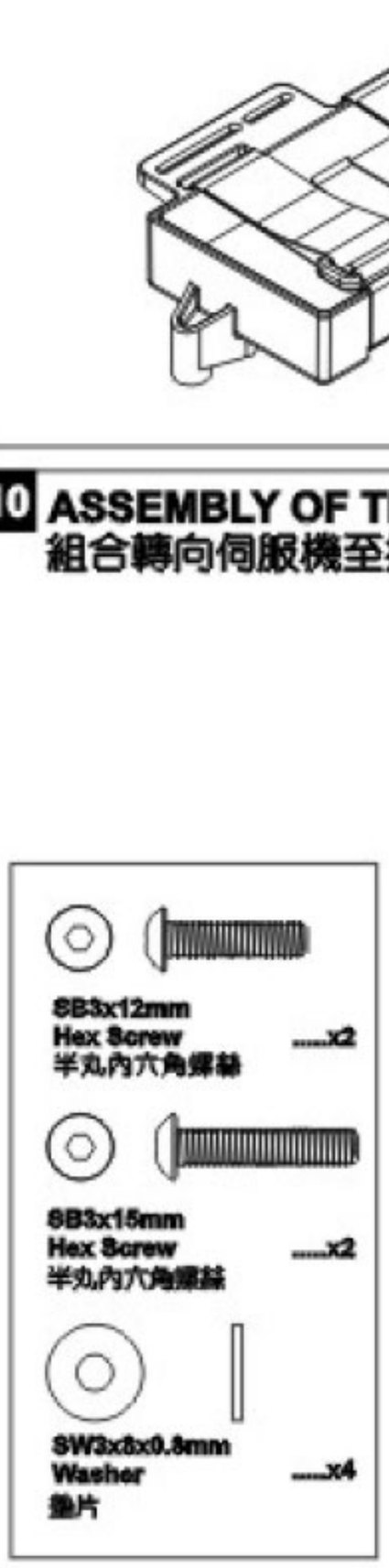

11 ASSEMBLY OF THE BATTERY CASE ONTO CHASSIS
組合電池盒至底盤

SF3x10mm
Flat Head Hex Screw x3
皿頭內六角螺絲

SF4x10mm
Flat Head Hex Screw x1
皿頭內六角螺絲

SF5x10mm
Flat Head Hex Screw x1
皿頭內六角螺絲

Step 1

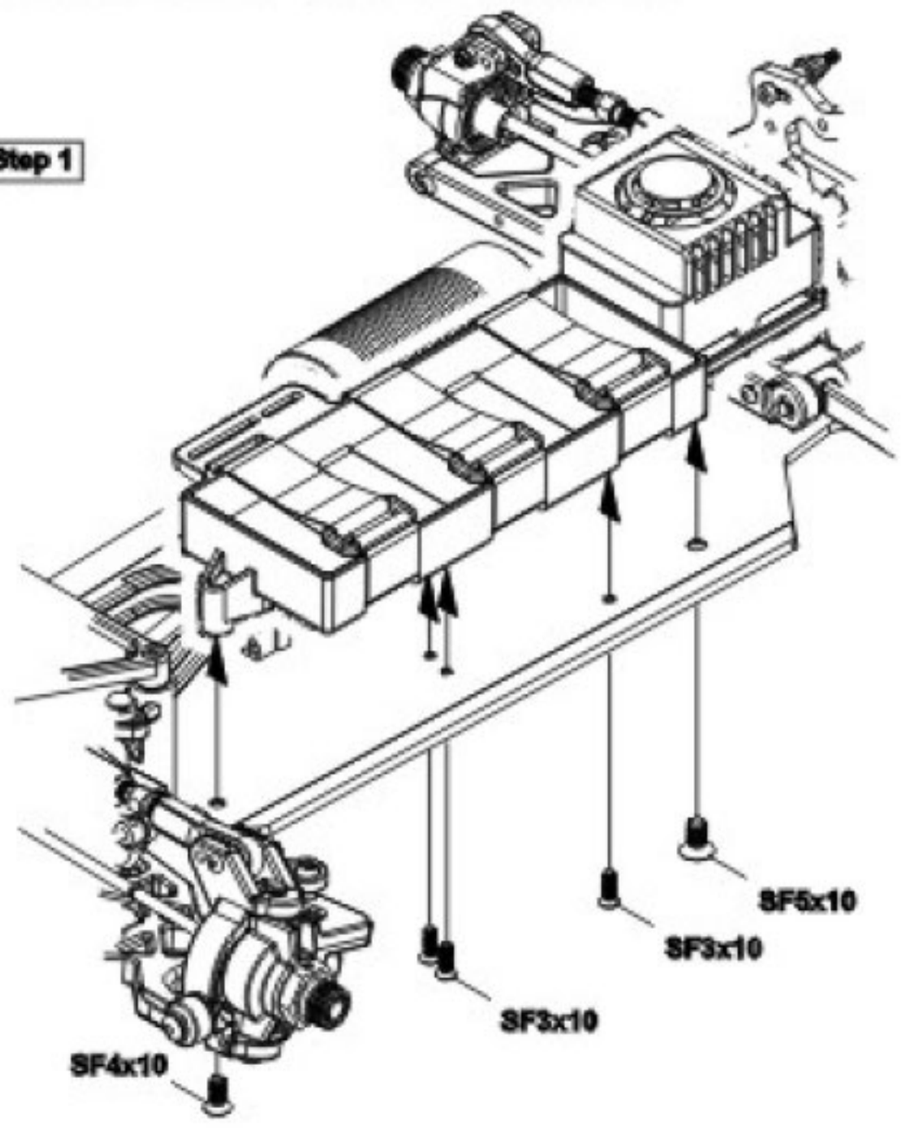

Step 2

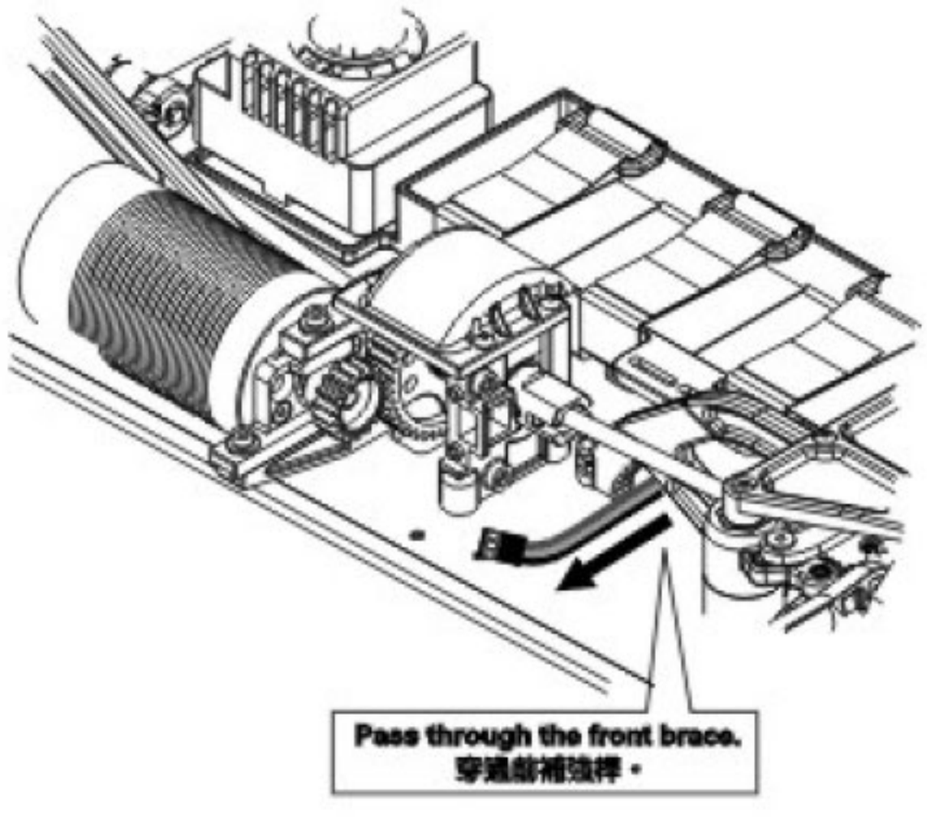

Pass through the front brace.
穿過前補強桿。

12 ASSEMBLY OF THE RADIO CASE ONTO CHASSIS
組合收機盒至底盤

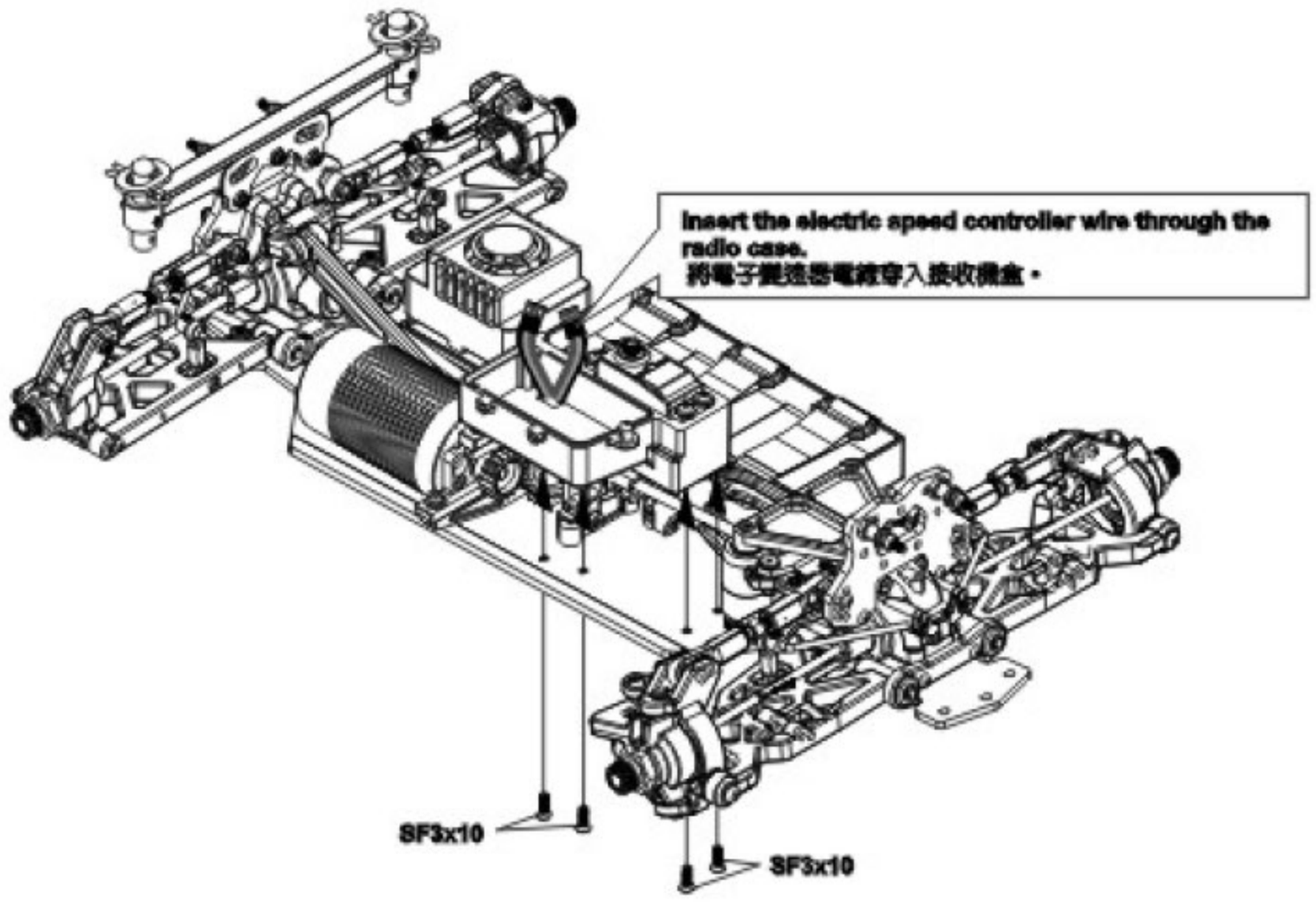

SF3x10mm
Flat Head Hex Screw x4
皿頭內六角螺絲

13 ASSEMBLY OF THE RECEIVER INTO RADIO CASE
組合接收機到接收機盒

Please carefully read the Receiver Instruction Manuals before installation.
安裝前請仔細閱讀接收機說明書。

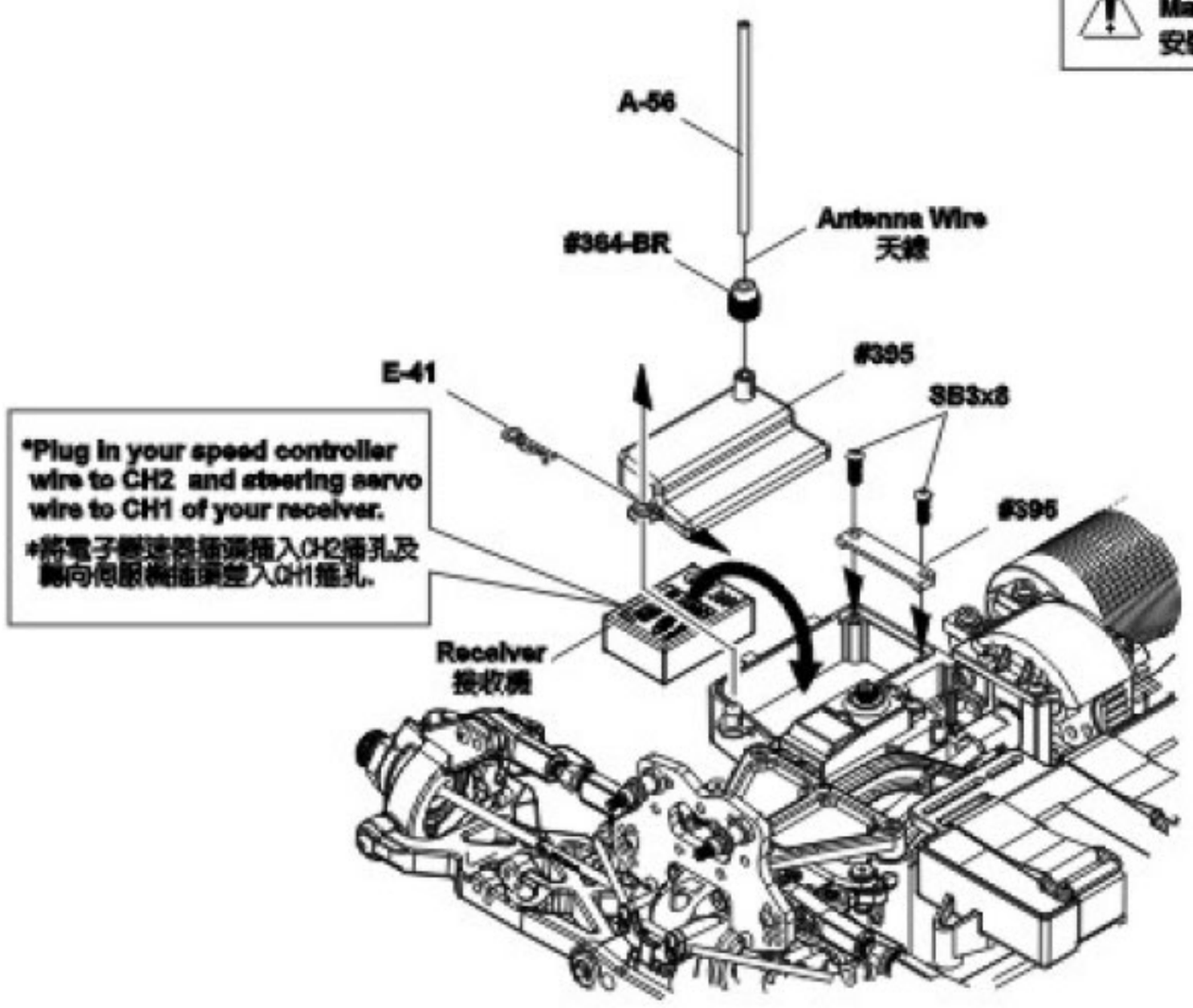

SB3x8mm
Hex Screw x2
半丸內六角螺絲

14 ASSEMBLY OF THE STEERING ROD
轉向拉桿組合

Step 1

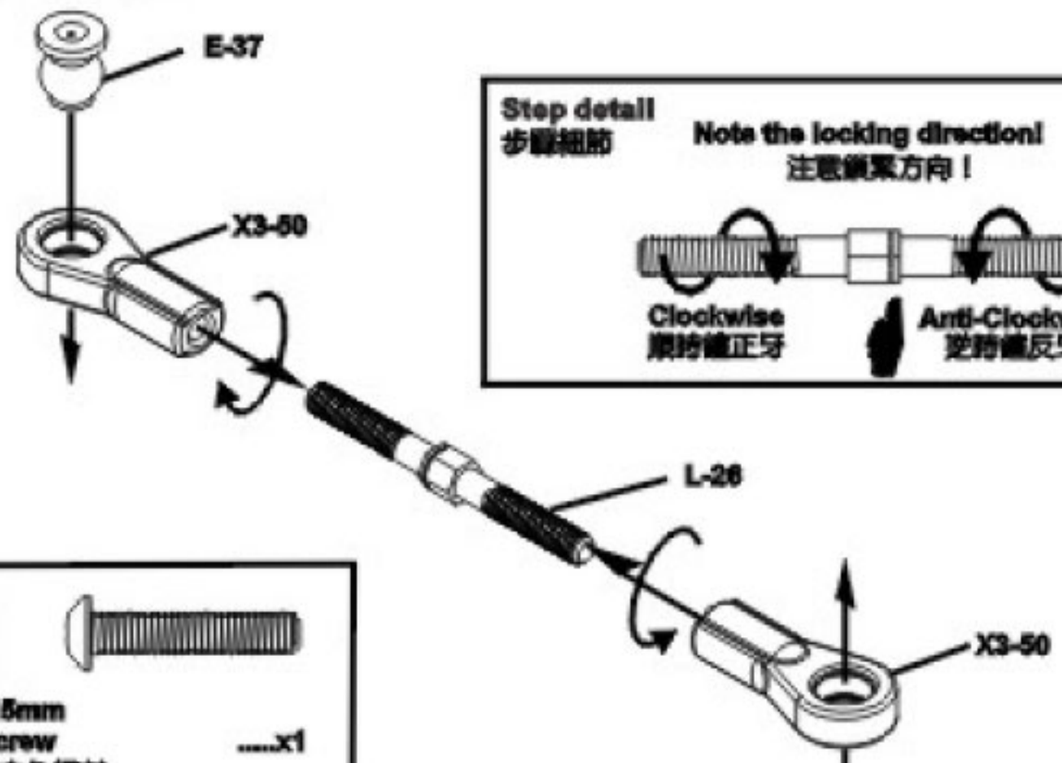

Step detail
步驟細節

Note the locking direction!
注意鎖緊方向！

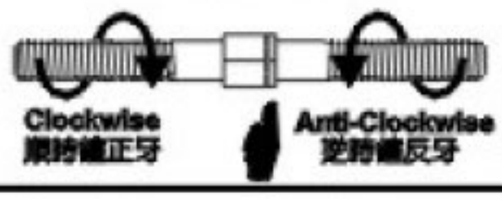

Step 2

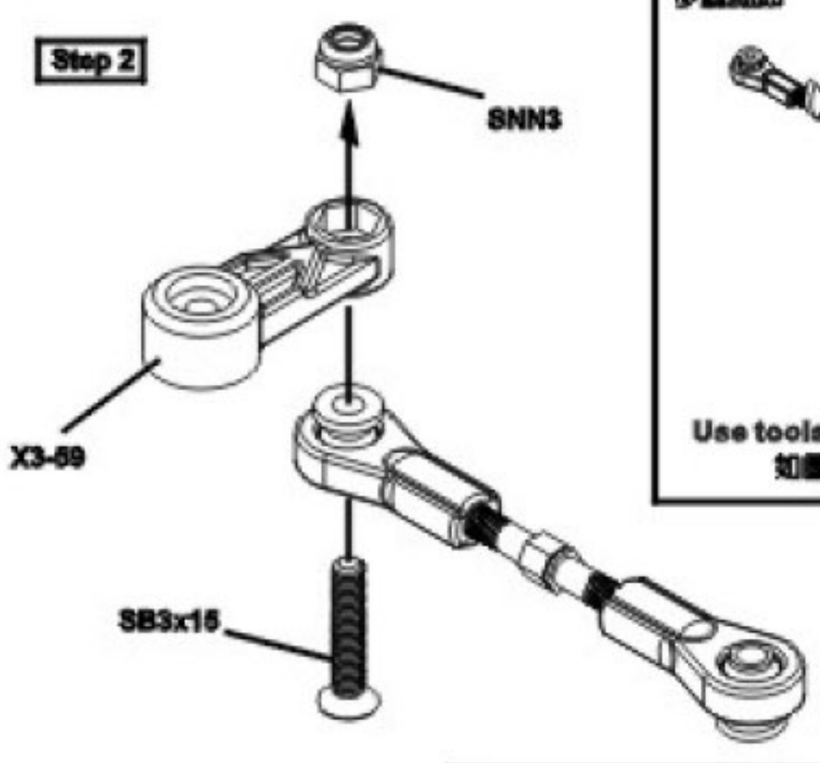

Step detail
步驟細節

SB3x15mm
Hex Screw x1
半丸內六角螺絲

E-37
6mm Ball and scoket x2
球型座

SNN3mm
Nylon Nut x1
尼龍螺帽

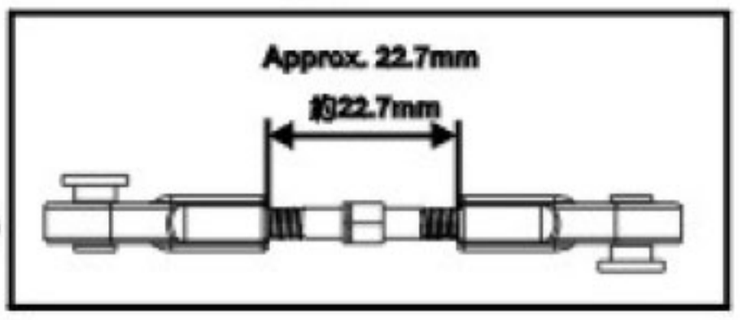

15 ASSEMBLY OF THE STEERING ROD ON STEERING SERVO
組合轉向拉桿到轉向伺服機

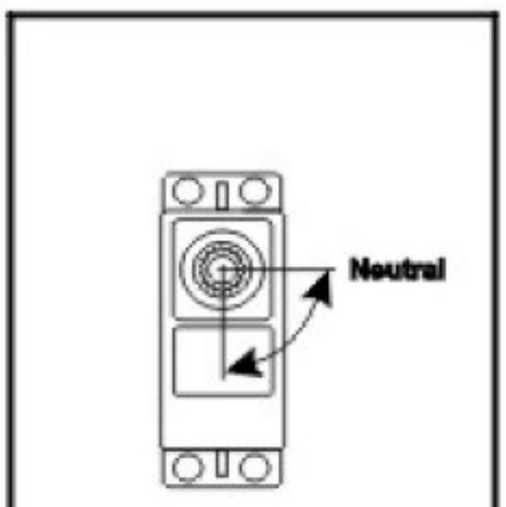

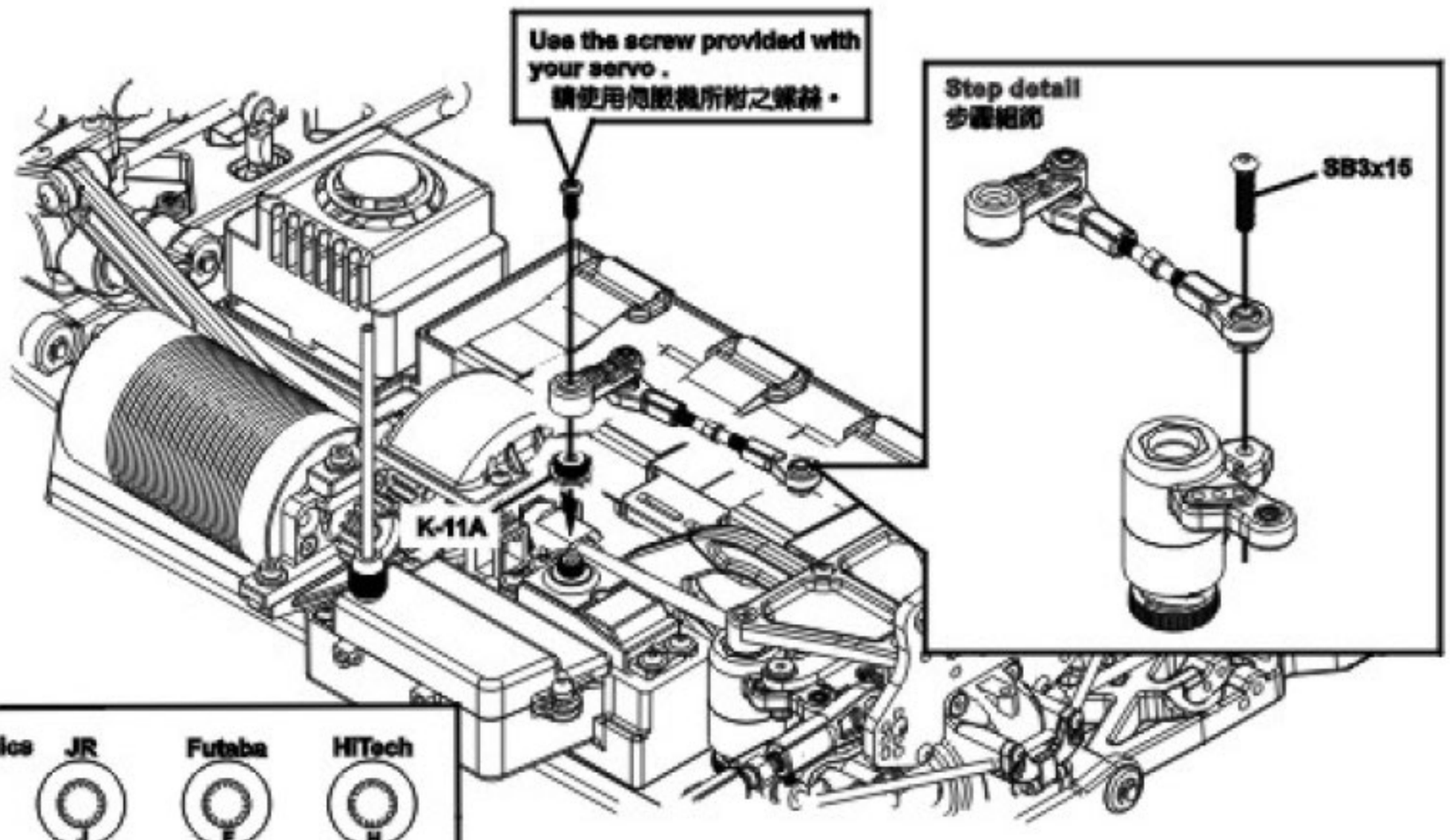

Step detail
步驟細節

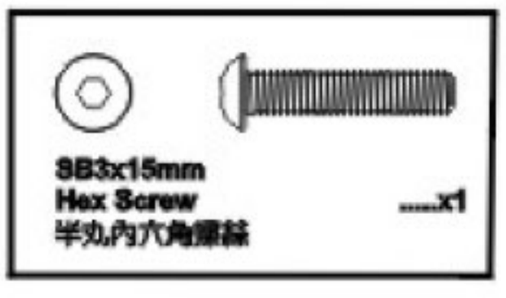

SB3x15mm
Hex Screw x1
半丸內六角螺絲

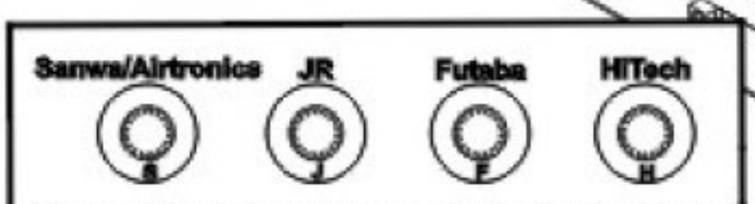

Choose the right servo horn adapter for your servo.
選擇適用的伺服機舵盤接套。

16 ASSEMBLY OF THE SHOCK SHAFTS
組合避震器

Assemble both left and right sides.
請組合左 / 右兩側。

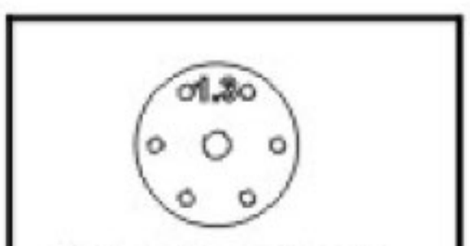

Use 1.3x6 holes piston for front and rear.
前後避震器活塞請使用1.3x6孔

SNN2.6mm
Nylon Nut x2
尼龍螺帽

SW2.6x6x0.5mm
Washer x4
墊片

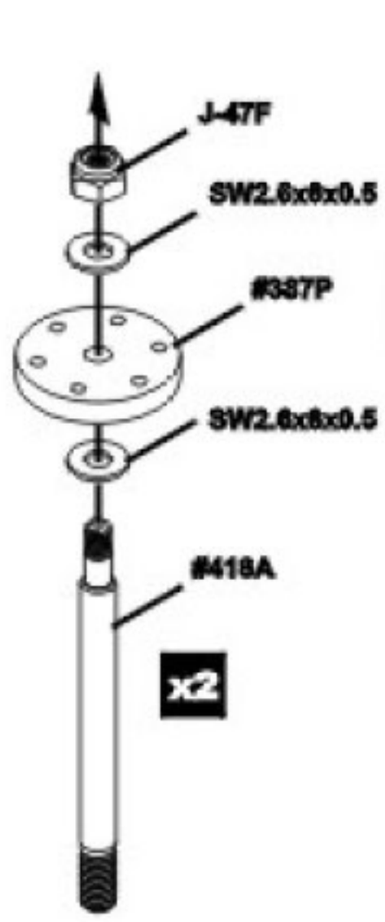

FRONT SHOCK
(SHORT)
前避震器
(短)

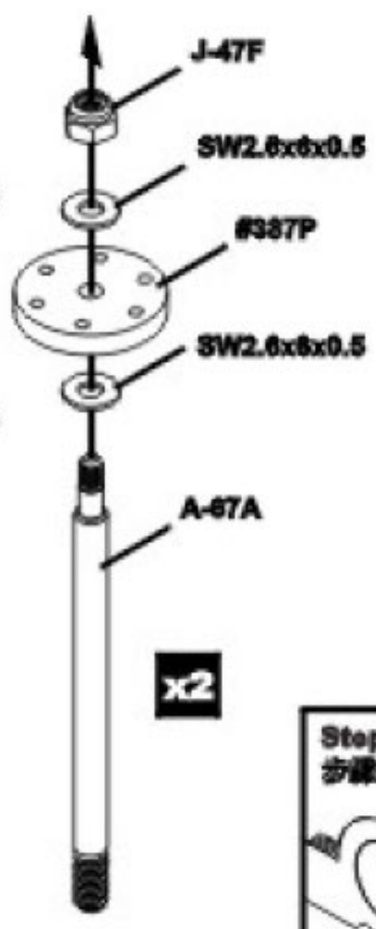

REAR SHOCK
(LONG)
後避震器
(長)

Step detail
步驟細節

●Hold the shock rod at it's thread with side needle nosed pliers.
使用尖嘴鉗夾住避震器心螺紋頂部。

●Be careful not to damage the shock rod.
小心不要夾傷避震器心。

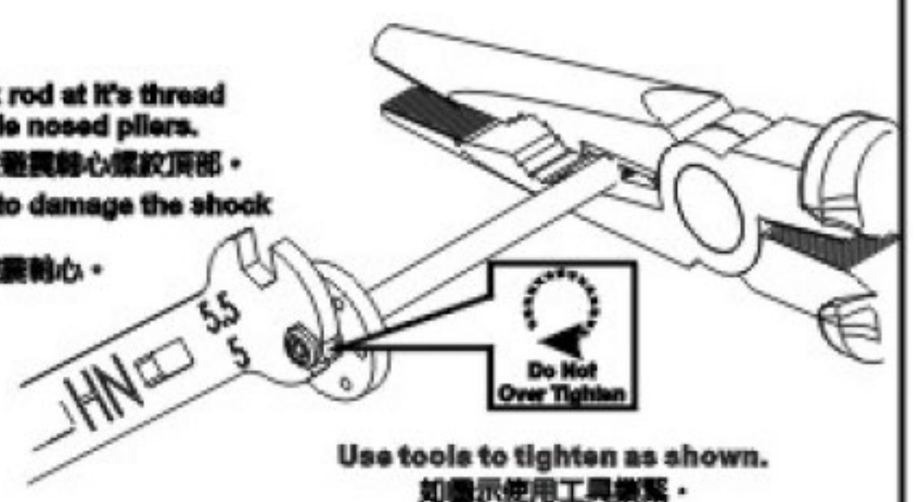

Use tools to tighten as shown.
如圖示使用工具鎖緊。

Step detail
步驟細節

Step detail
步驟細節

Step detail
步驟細節

17 ASSEMBLY OF THE SHOCKS SPRING
組合避震器彈簧

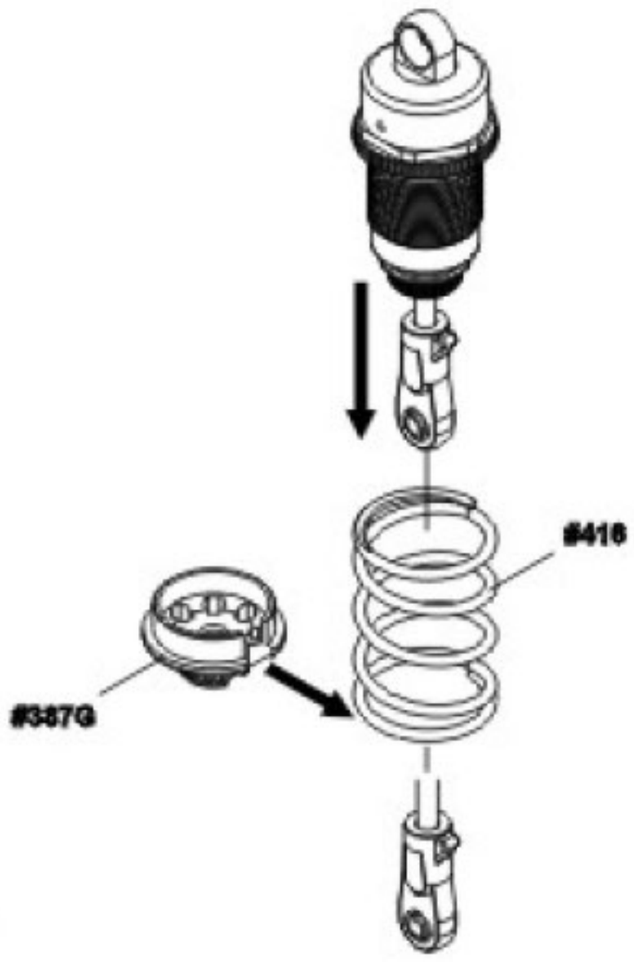

FRONT SHOCK
前避震器

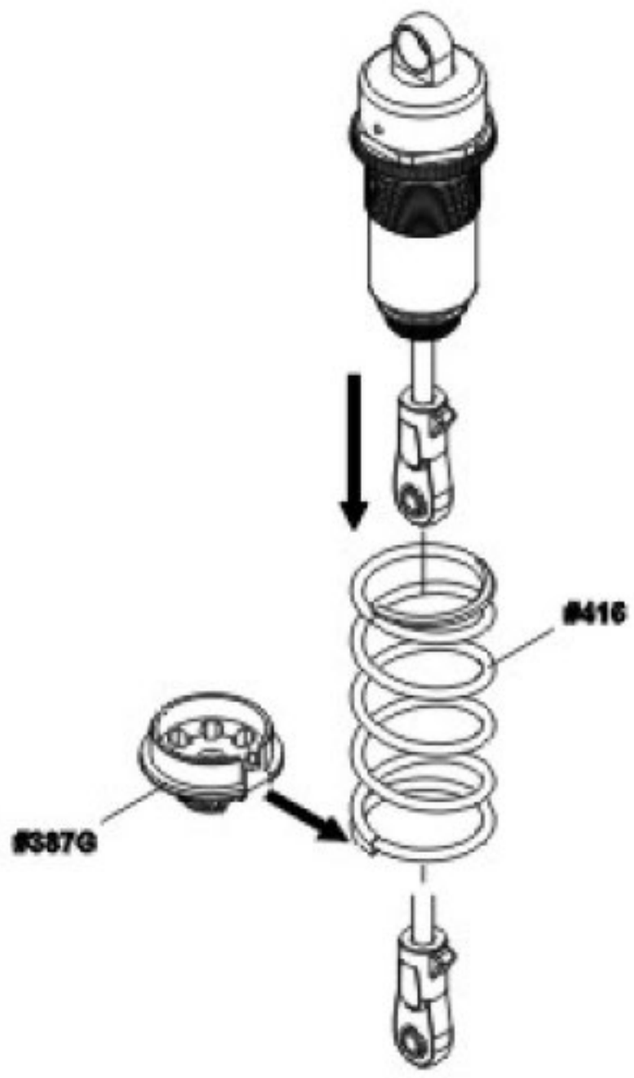

REAR SHOCK
後避震器

18 ASSEMBLY OF THE SHOCKS INTO THE SHOCK STAY
組合避震器至油壓架

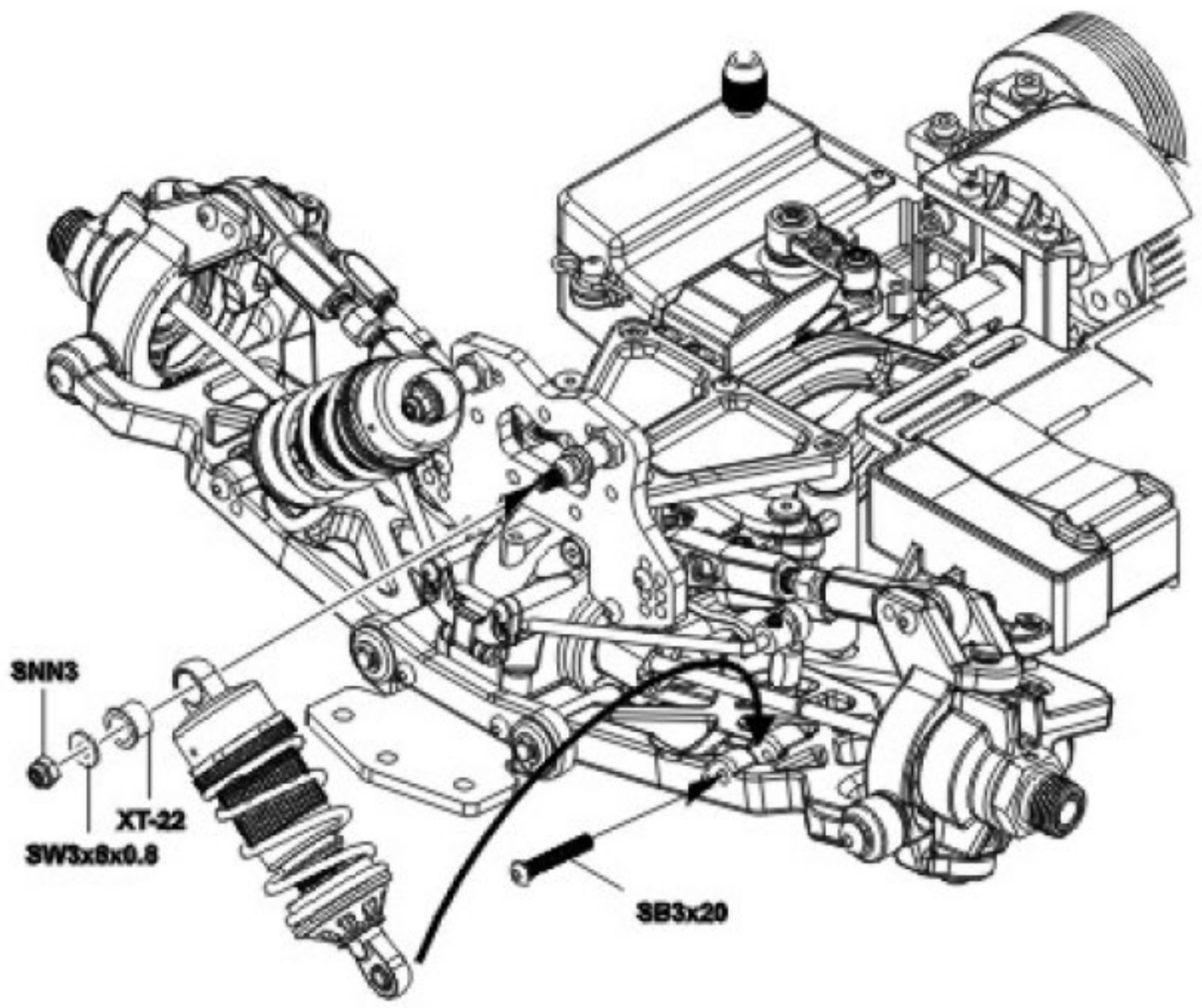

SNN3mm
Nylon Nut x2
尼龍螺帽

SW3x8x0.8
Washer x2
墊片

SB3x20mm
Hex Screw x2
半丸內六角螺絲

19 ASSEMBLY OF THE SHOCKS INTO THE SHOCK STAY
組合避震器至油壓架

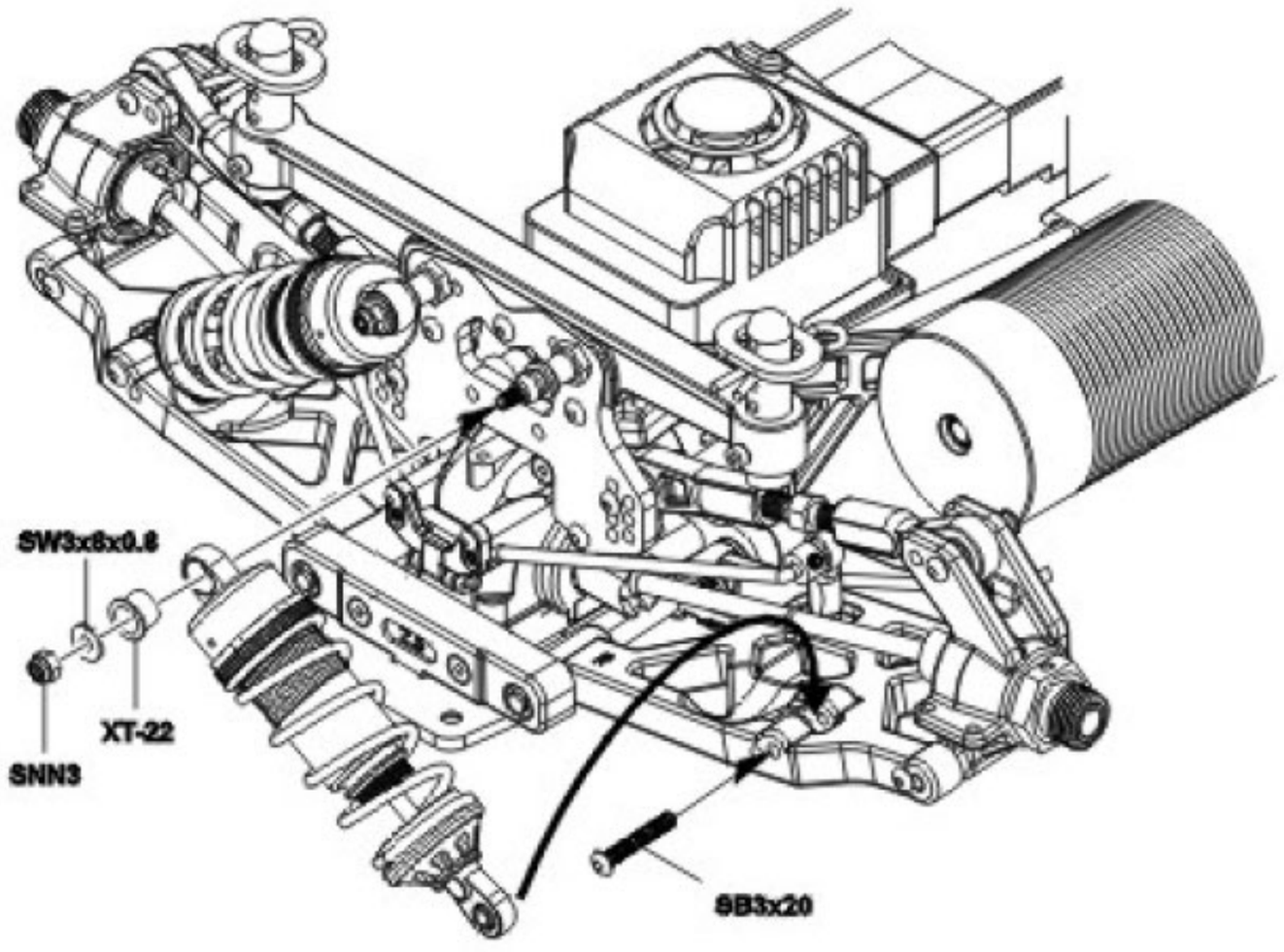

SNN3mm
Nylon Nut x2
尼龍螺帽

SW3x8x0.8
Washer x2
墊片

SB3x20mm
Hex Screw x2
半丸內六角螺絲

20 ASSEMBLY OF THE FRONT BUMPER
前防撞板組合

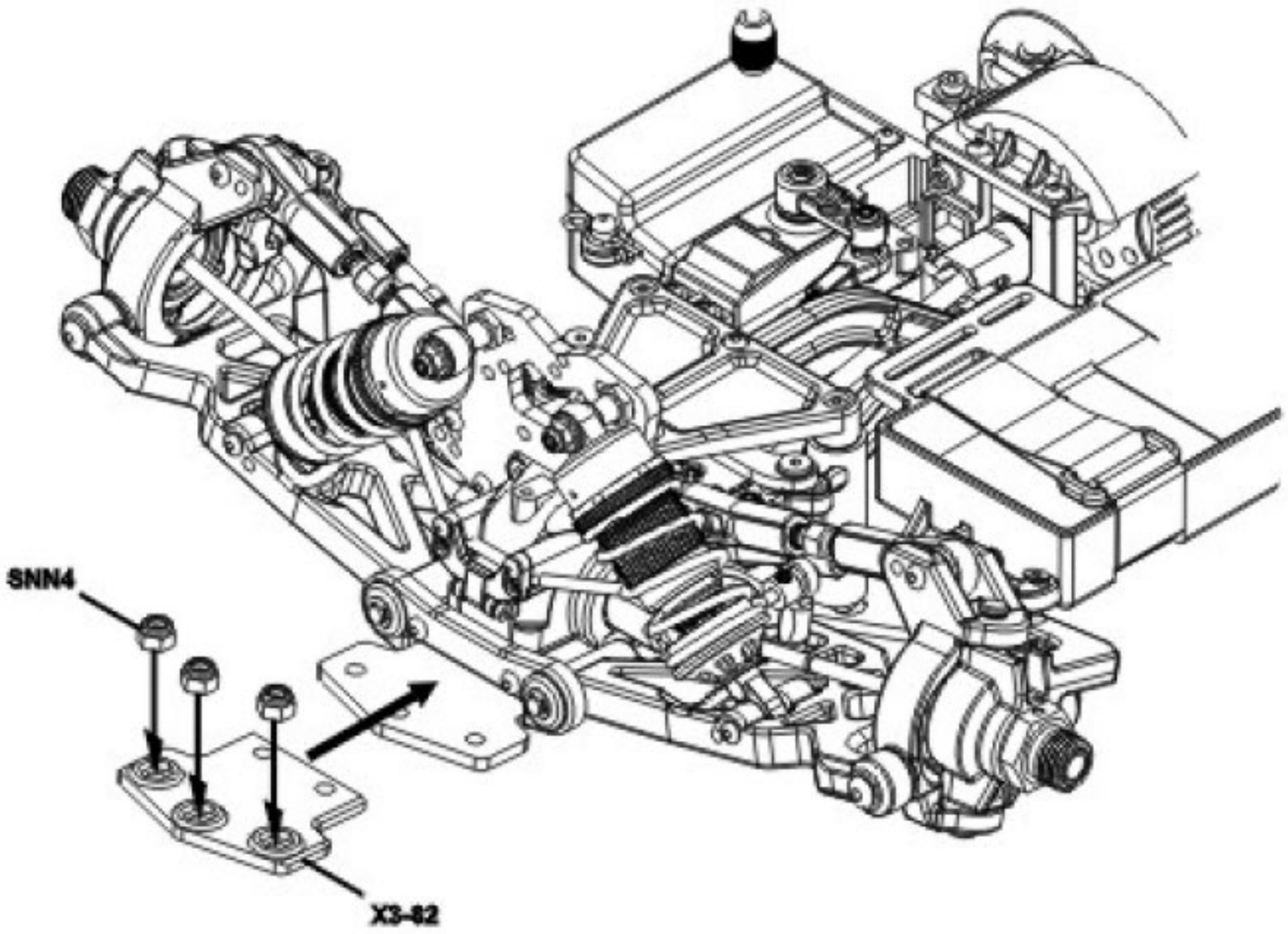

SNN4mm
Nylon Nut x3
尼龍螺帽

21 ASSEMBLY OF THE FRONT BUMPER
前防撞板組合

SF3x12mm
Flat Head Hex Screw x2
皿頭內六角螺絲

SF4x14
Flat Head
Hex Screw x3
皿頭內六角螺絲

SF4x16
Flat Head
Hex Screw x2
皿頭內六角螺絲

Step 1

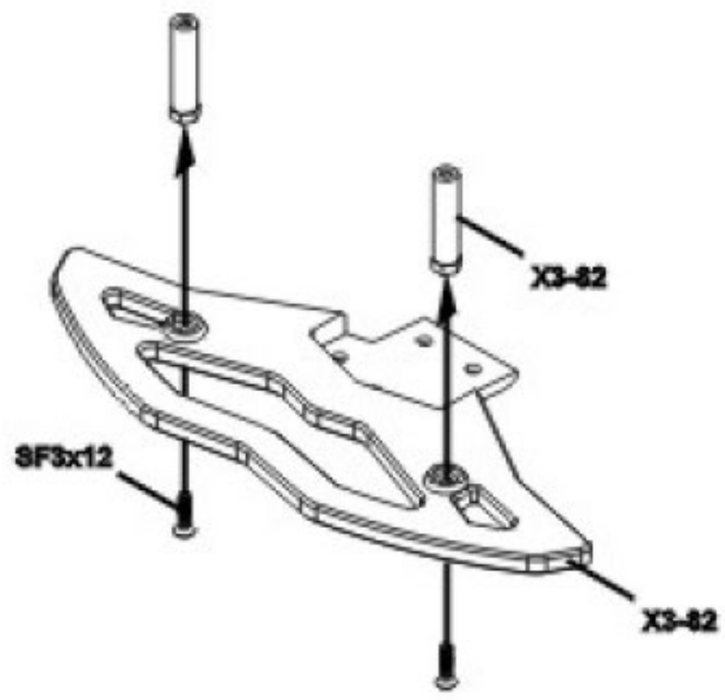

Step 2

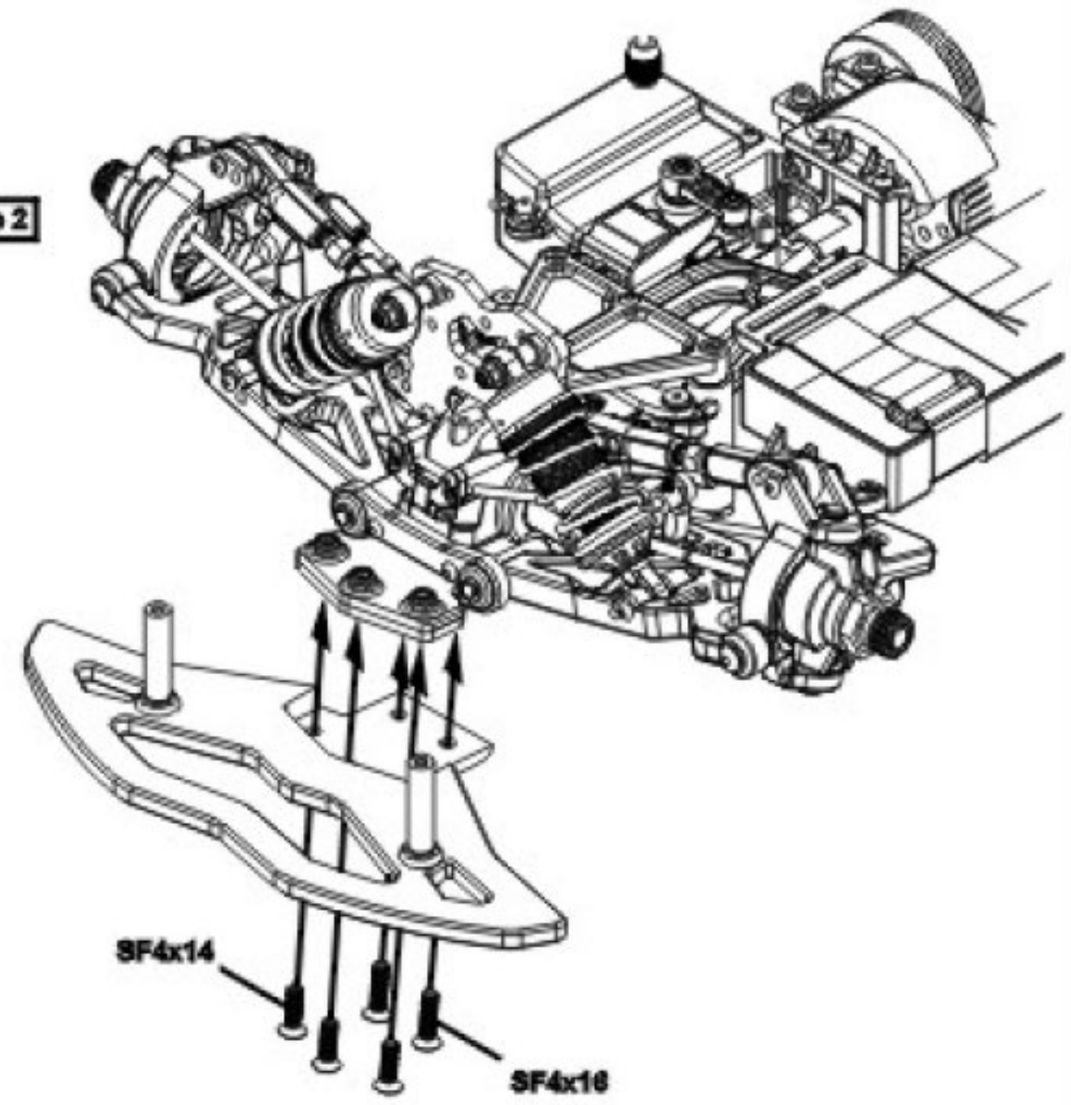

22 ASSEMBLY OF THE FRONT BUMPER
前防撞板組合

SNN3mm
Nylon Nut x2
尼龍螺帽

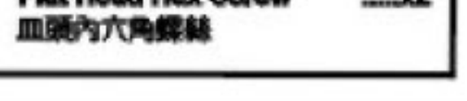

SF3x10mm
Flat Head Hex Screw x2
皿頭內六角螺絲

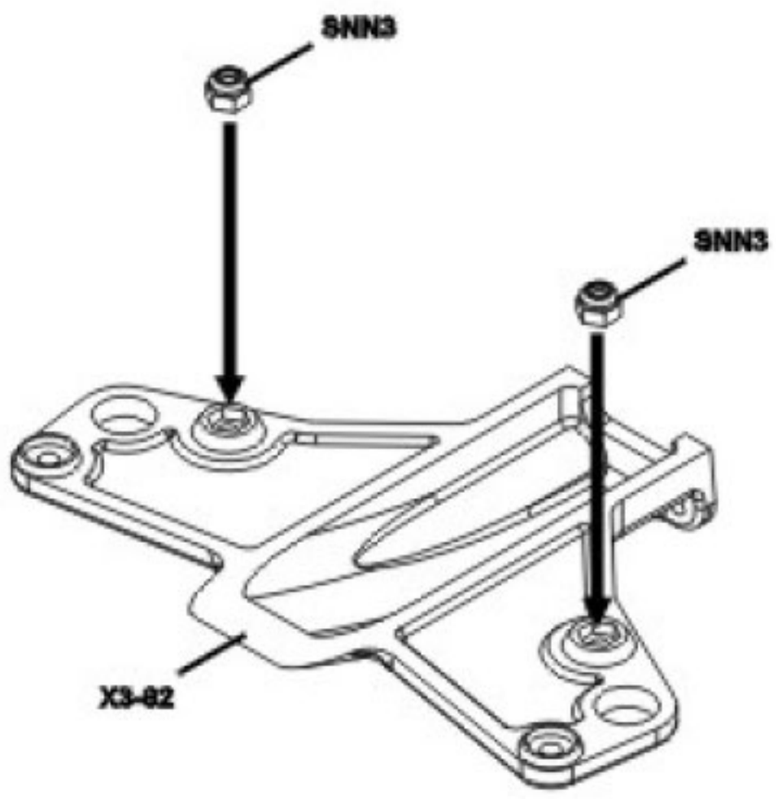

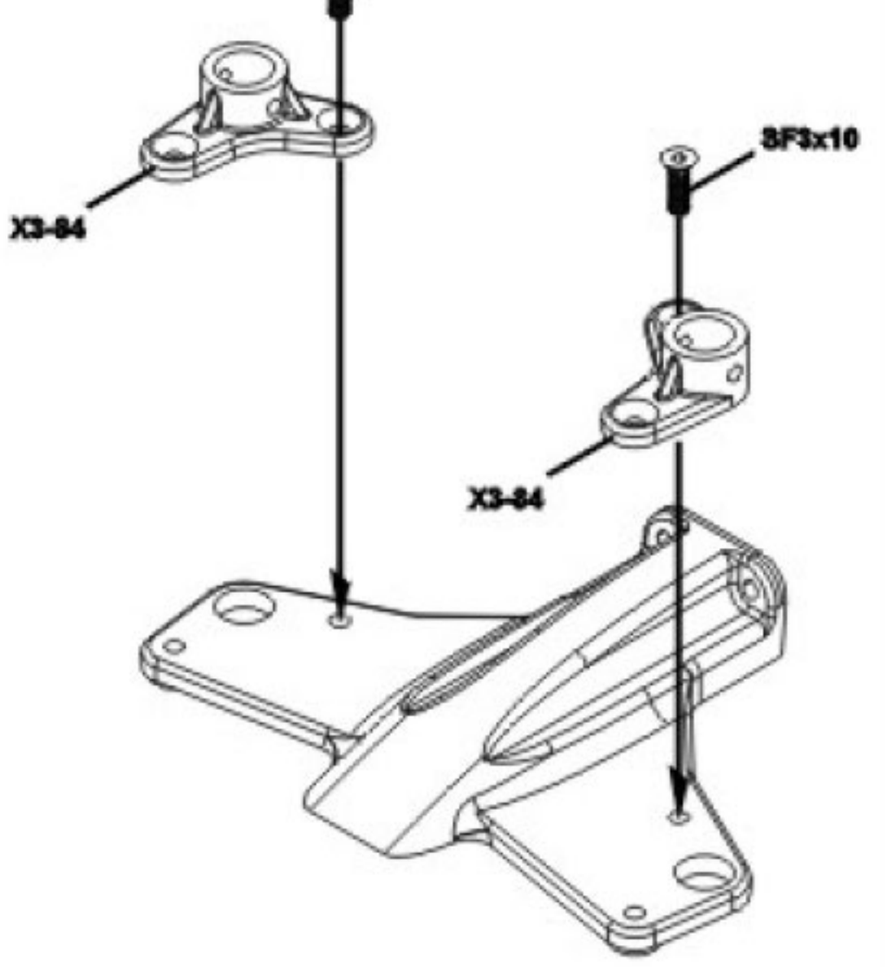

23 ASSEMBLY OF THE FRONT BUMPER
前防撞板組合

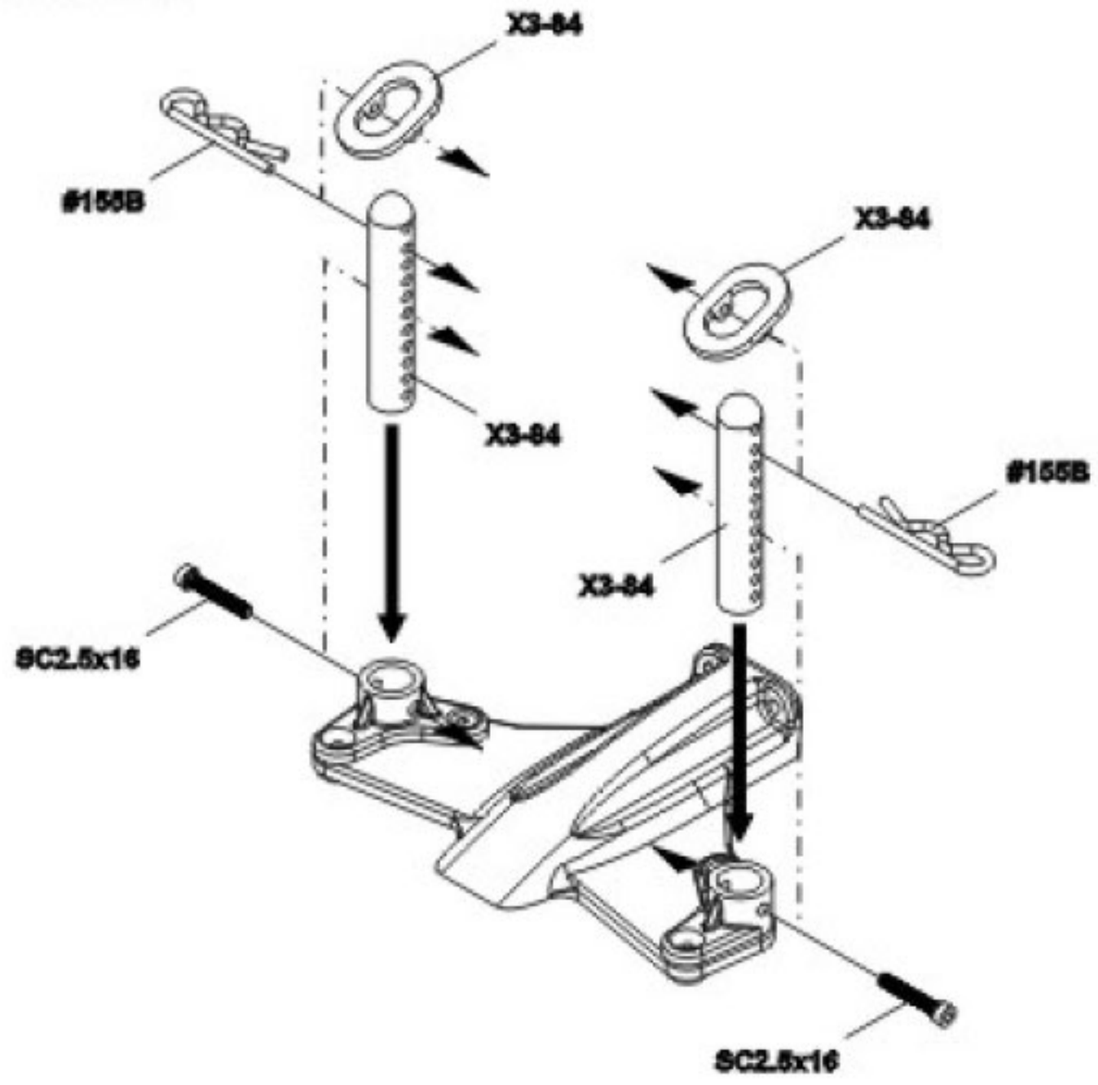

Step detail
步驟細節

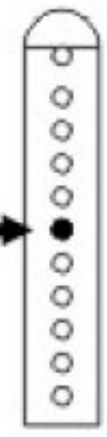

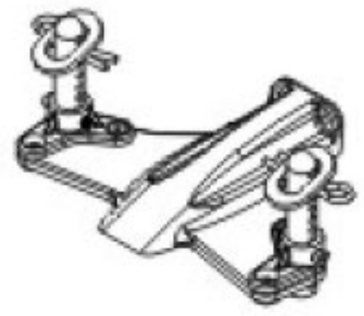

SC2.5x16mm
Cap Screw x2
有頭內六角螺絲

24 ASSEMBLY OF THE FRONT BUMPER
前防撞板組合

Step 1

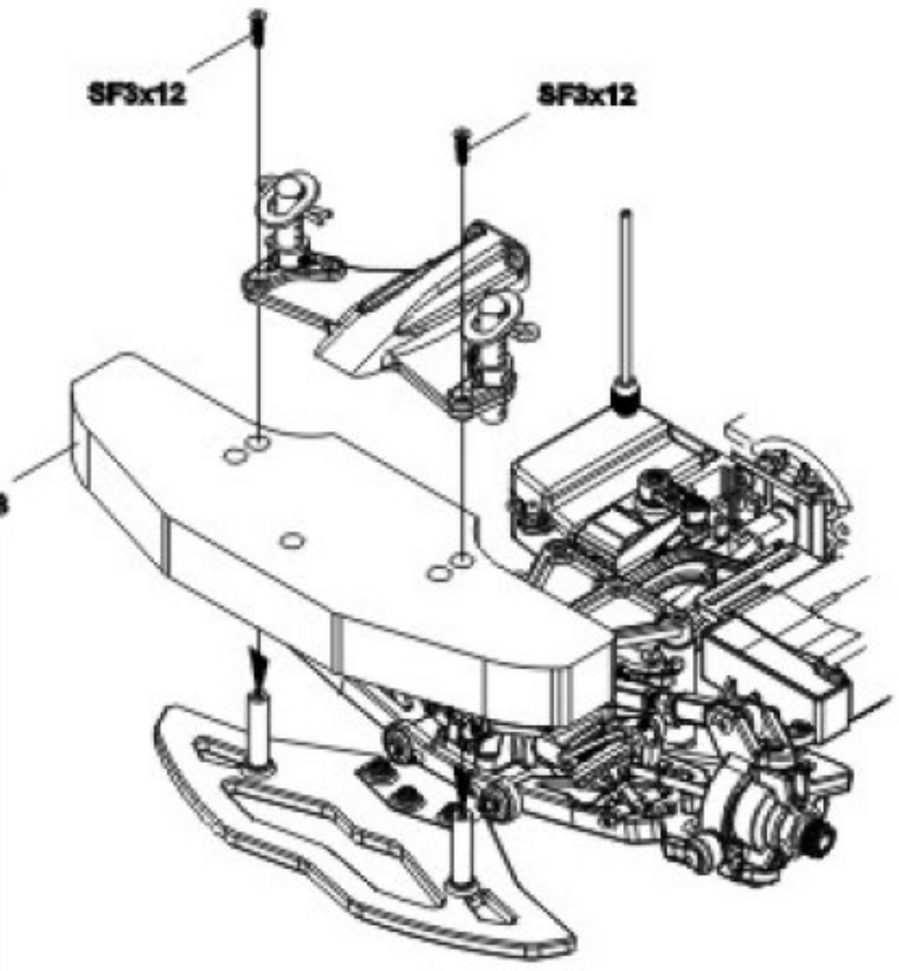

Step 2

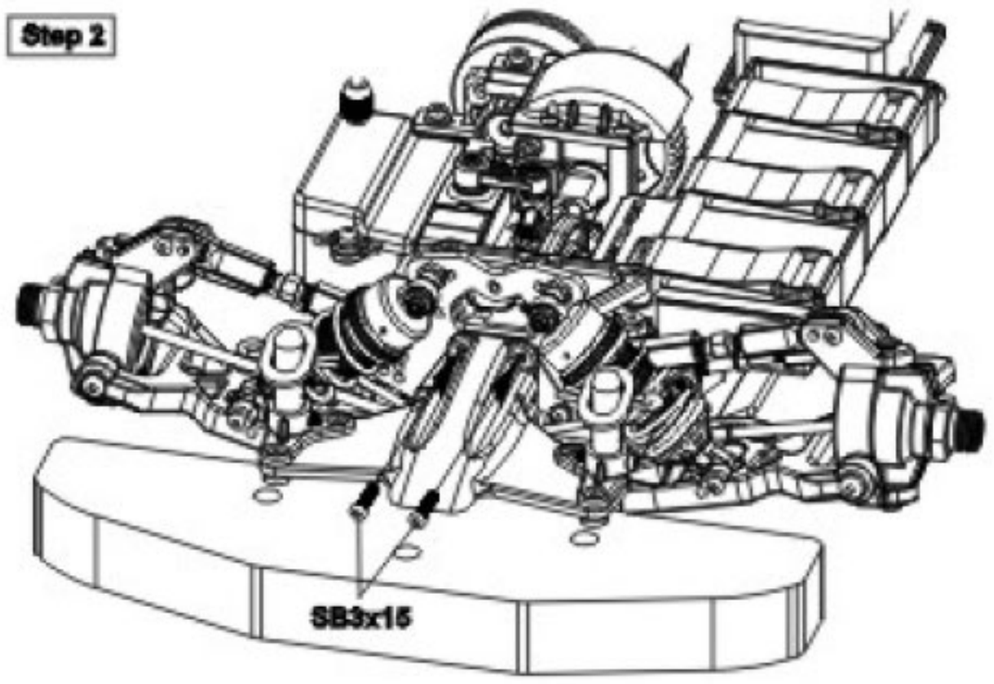

SF3x12mm
Flat Head Hex Screw x2
皿頭內六角螺絲

SB3x15mm
Hex Screw x2
半丸內六角螺絲

25 ASSEMBLY OF THE REAR BUMPER
後防撞板組合

SNN4mm
Nylon Nut x2
尼龍螺帽

SF3x12mm
Flat Head Hex Screw x2
皿頭內六角螺絲

SF4x12mm
Flat Head Hex Screw x2
皿頭內六角螺絲

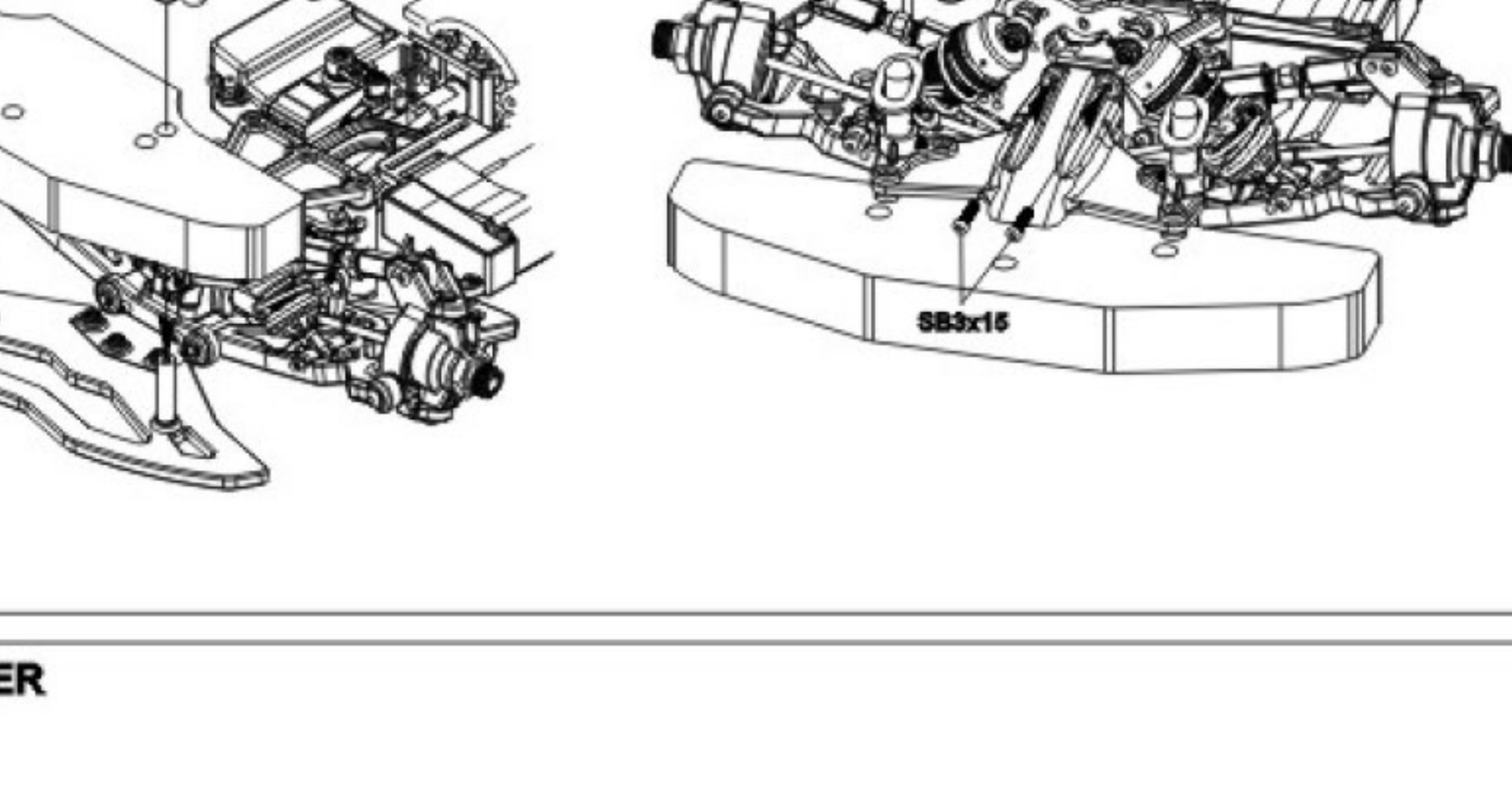

26 ASSEMBLY OF THE REAR BUMPER
後防撞板組合

SF3x12mm
Flat Head Hex Screw x2
皿頭內六角螺絲

SB3x15mm
Hex Screw x2
半丸內六角螺絲

Step 1

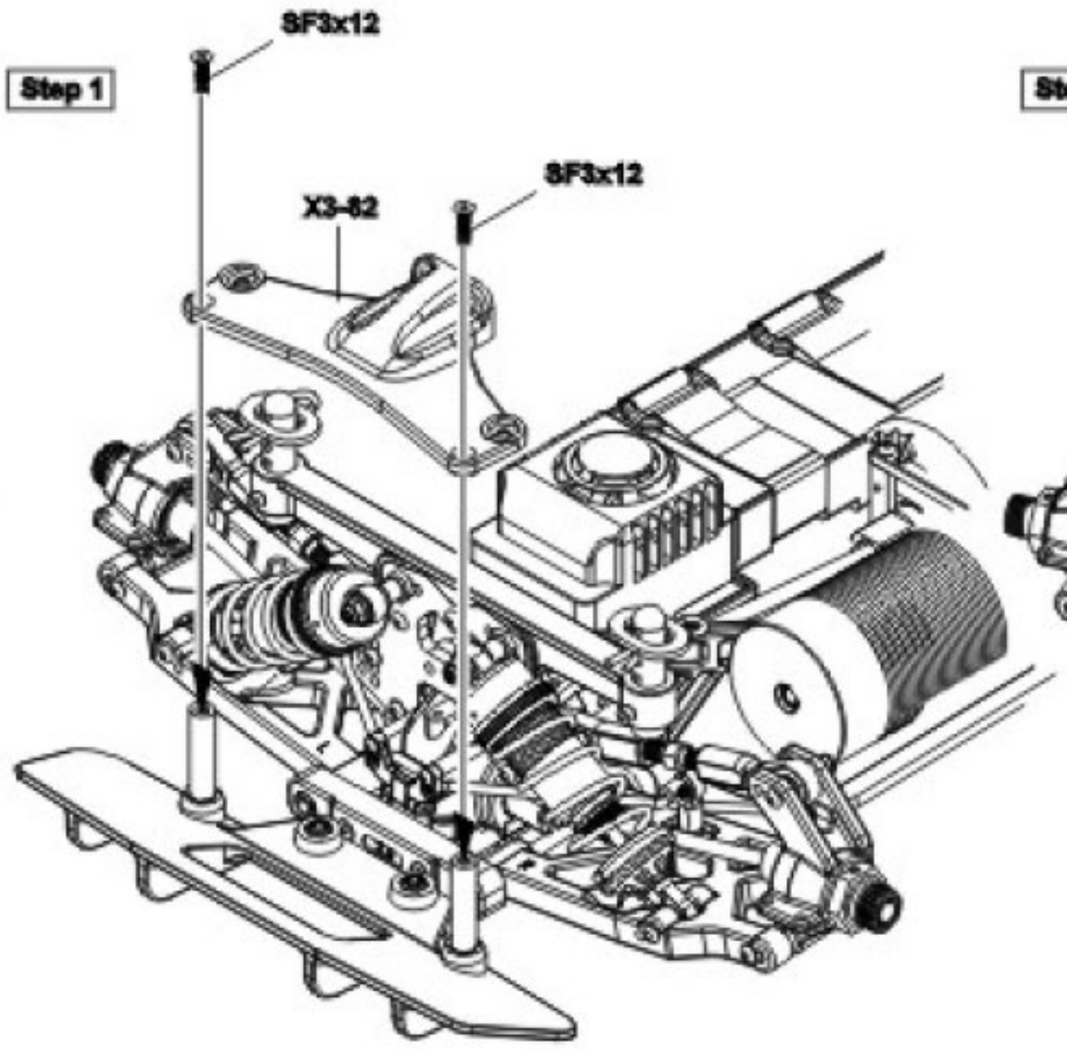

Step 2

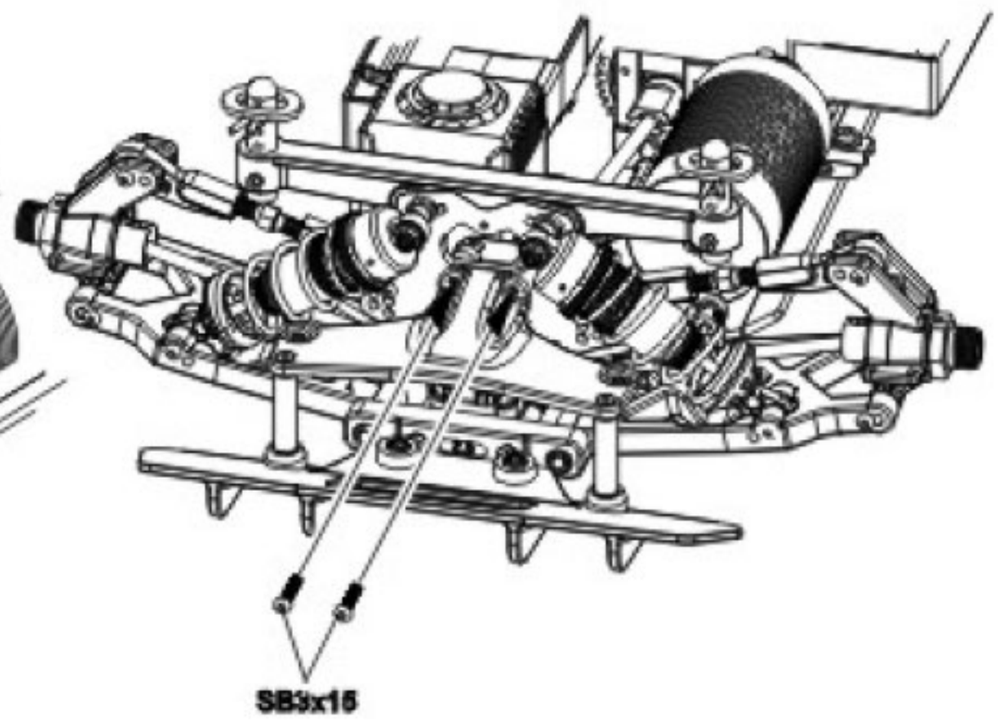

27 ASSEMBLY OF THE TIRES AND WHEELS
輪胎與輪圈組合

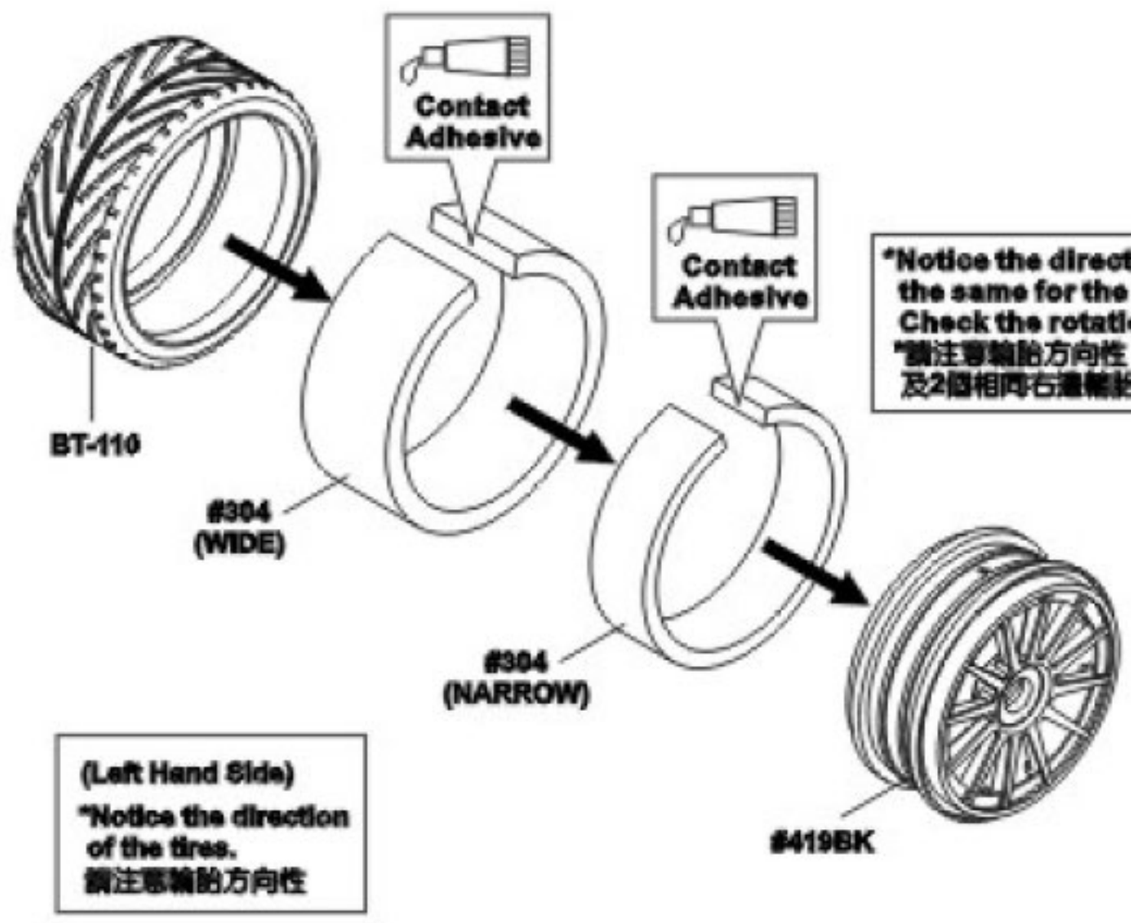

*Notice the direction of the tires. Make two the same for the left and 2 for the right. Check the rotation direction before gluing.
*請注意輪胎方向性，並組合2個相同左邊輪胎及2個相同右邊輪胎。

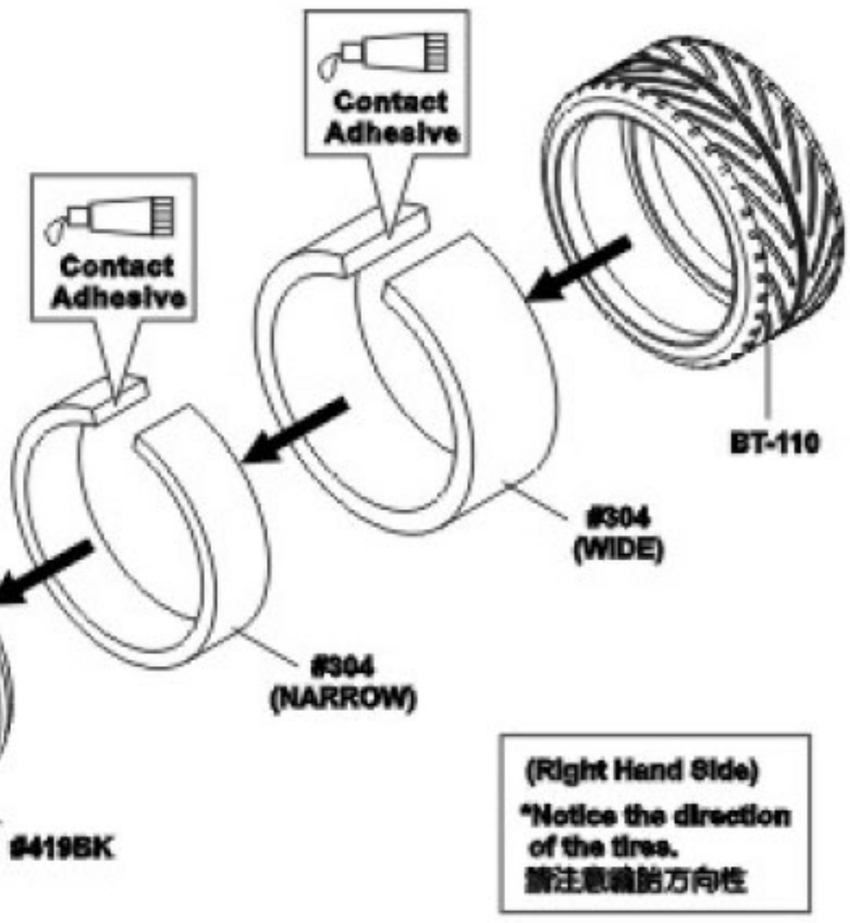

(Left Hand Side)
*Notice the direction of the tires.
請注意輪胎方向性

(Right Hand Side)
*Notice the direction of the tires.
請注意輪胎方向性

28 ASSEMBLY OF THE TIRES AND WHEELS
輪胎與輪圈組合

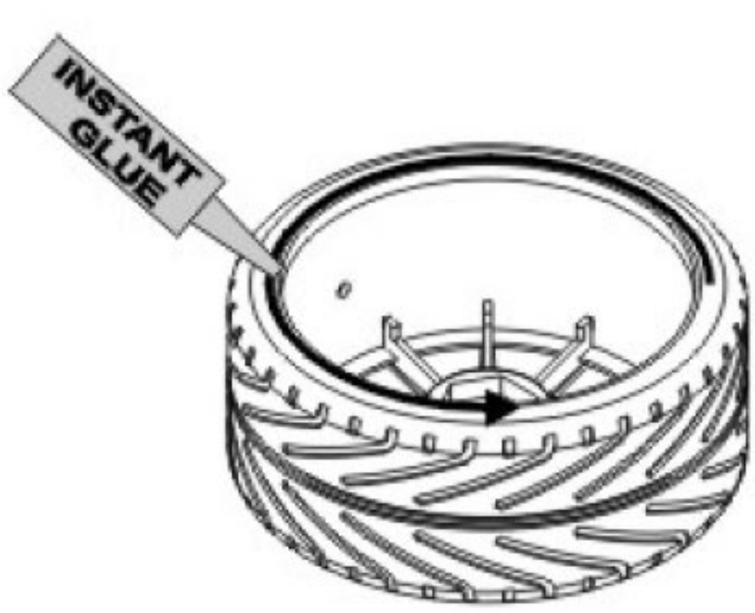

Step detail
步驟細節

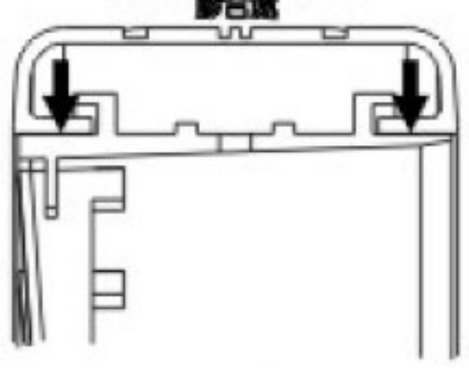

●Use " Instant glue " and draw a line around the rim where it attaches the tire . When it is dry glue the other side of the rim.
請在輪圈與輪胎接合處用"瞬間膠水"粘合，並等其乾固之後再粘合另外一面。
●Repeat the step and ensure the rim and tire are fully glued.
請重複步驟確定輪胎與輪框完全粘合，以避免脫落。

29 ASSEMBLY OF THE TIRES ONTO THE FRONT KNUCKLE AND REAR HUB
組合輪胎至車體

Assemble both left and right sides.
請組合左 / 右兩側。

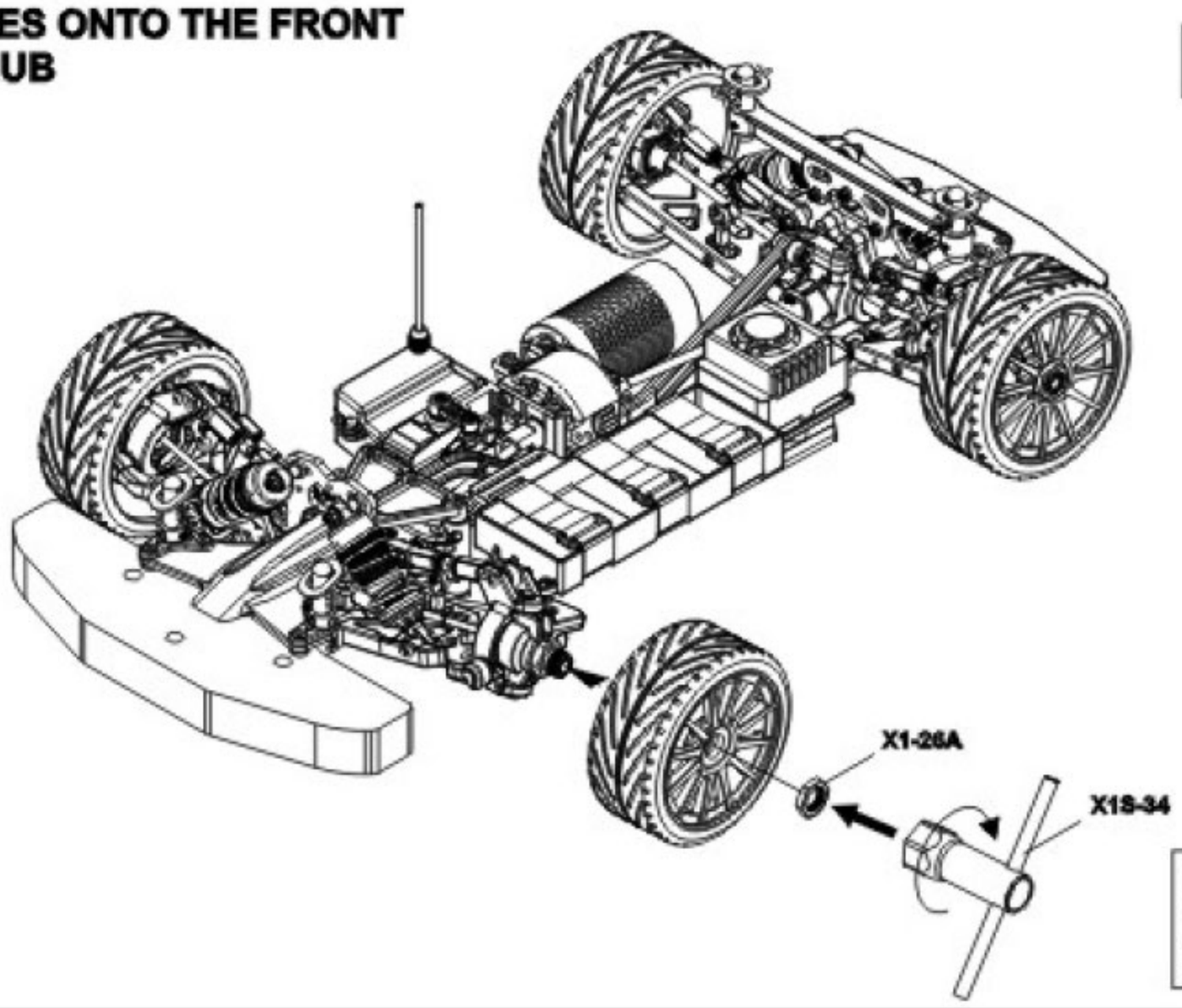

X1-26A
Wheel Nut x4
鋁六角螺帽

To tighten the Wheel Nut you can also use 17mm Wheel Nut Tool.(X1S-34)
你可以使用17mm六角套筒板手鎖緊輪框螺帽。(X1S-34)

30 BATTERY INSTALL
安裝電池

*Be aware of the Negative and Positive connects direction of the battery.
*電線與接時請注意正負極方向。

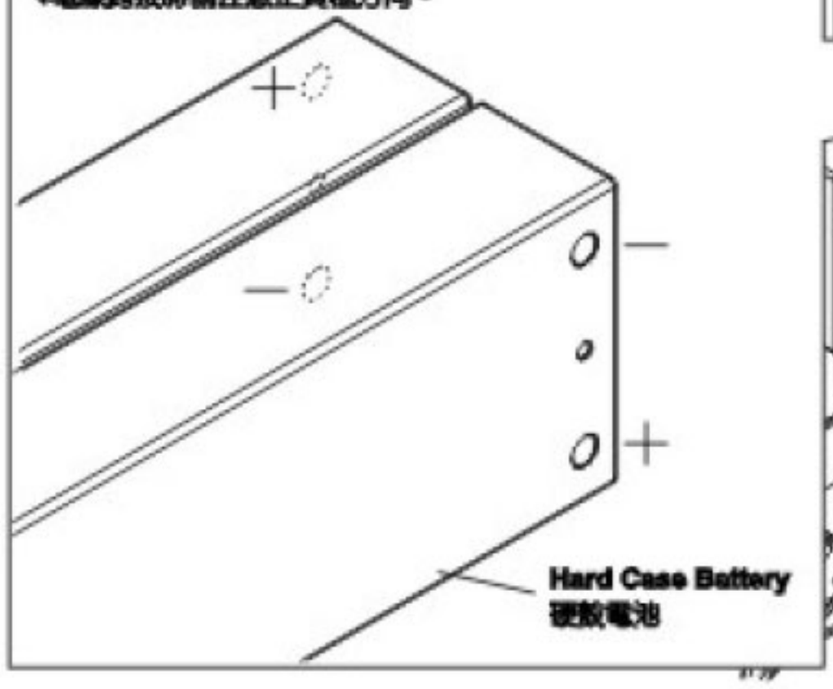

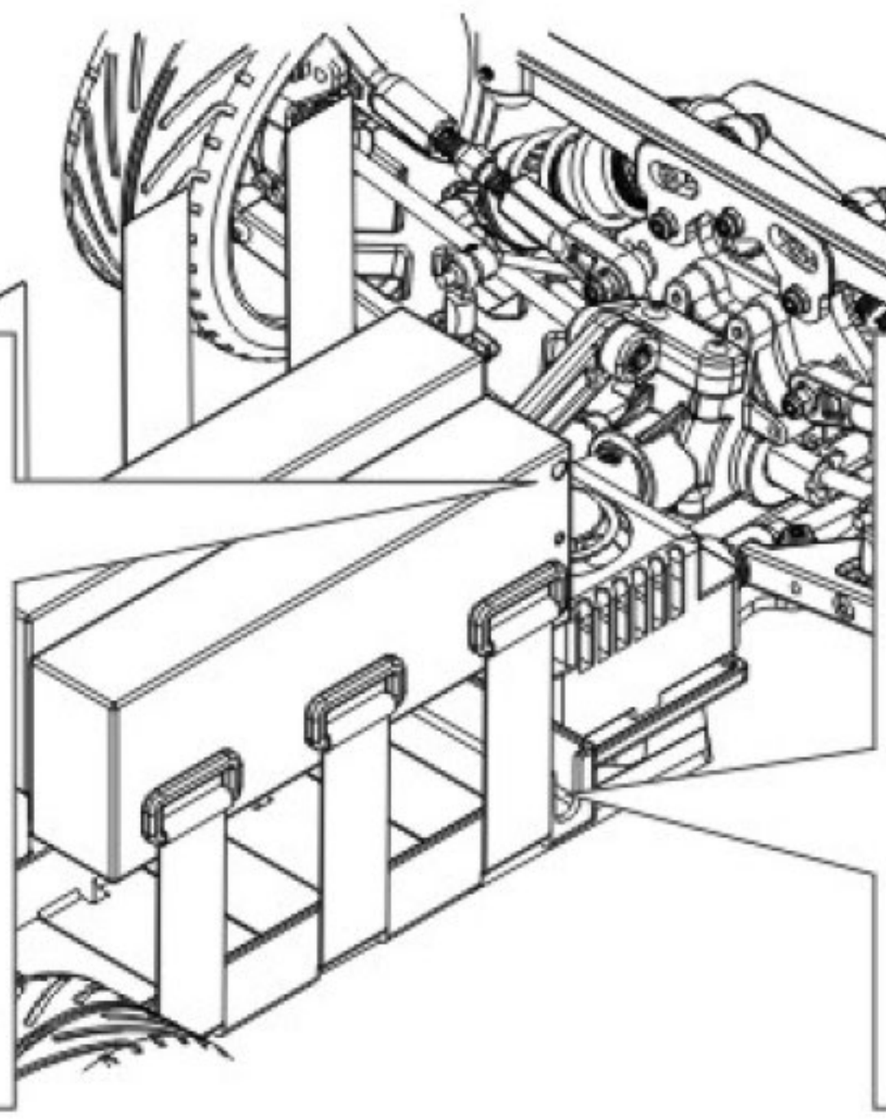

*If use hard case battery , make a hole as picture shown.
*使用部分硬殼電池時，須在電池盒上鑽出如圖所示的開口。

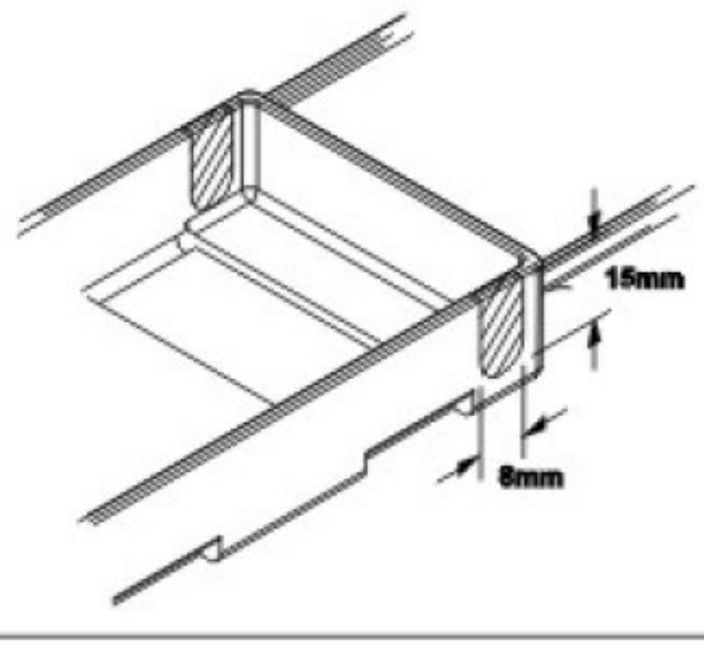

31 MAKING HOLES AND CUTTING ON THE BODY SHELL
鑽孔與剪裁車殼

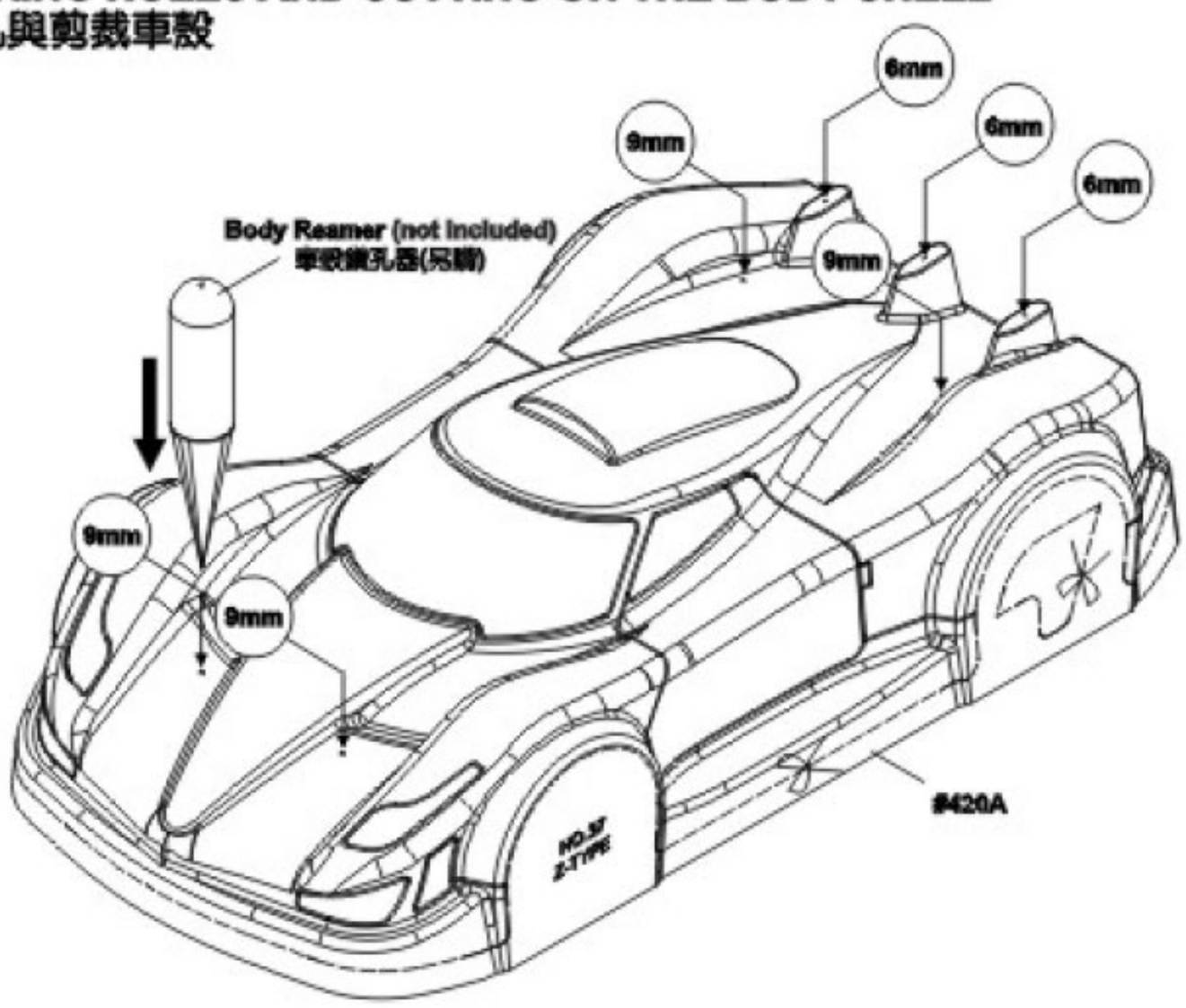

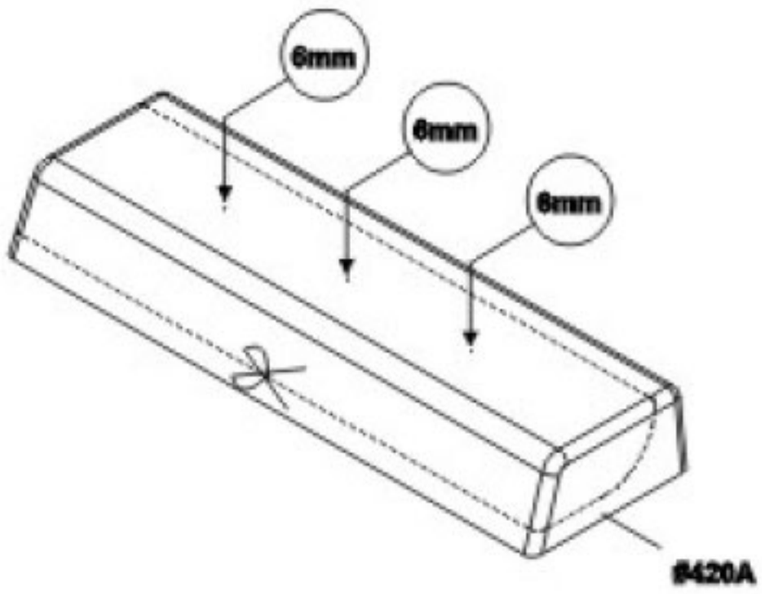

Step 1
Cut the body shell as shown.
如圖示裁剪車殼。

Step 2
Peel off the external protective films.
撕去外部保護膜。

32 ASSEMBLY OF THE WING
組合定風翼

Step 1

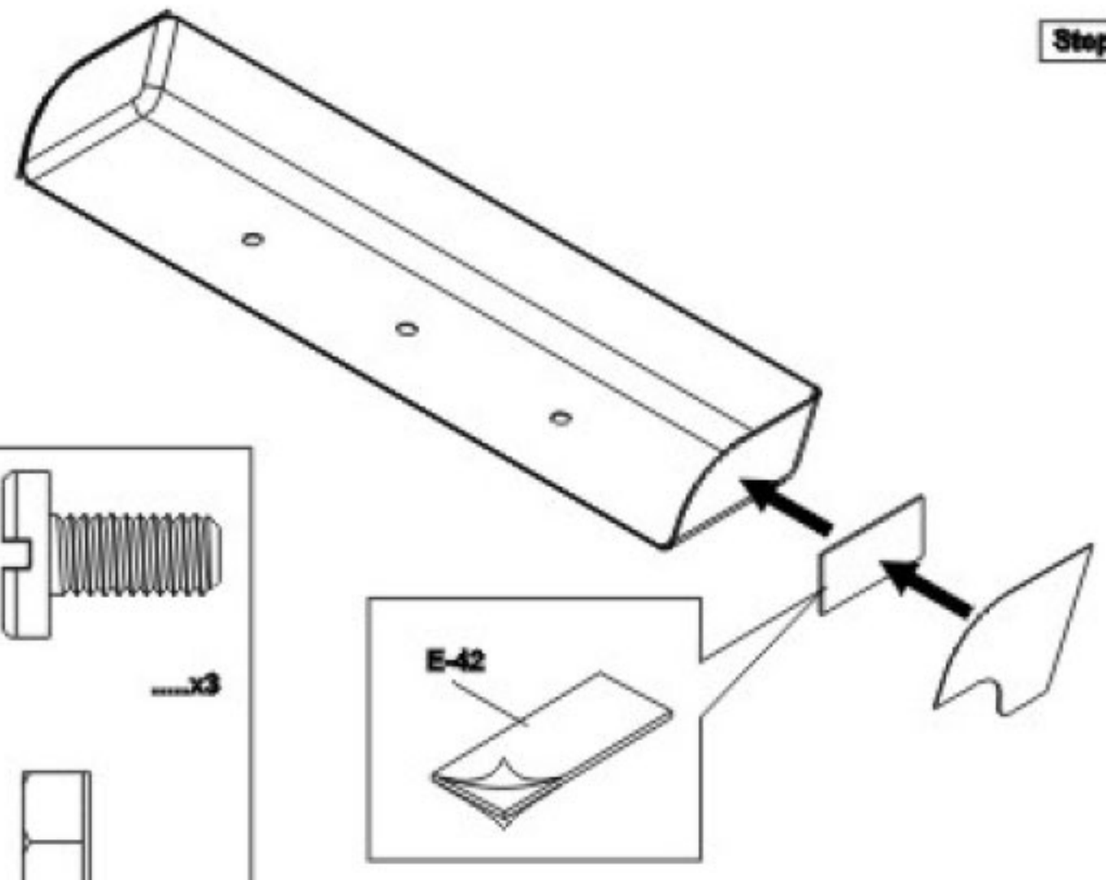

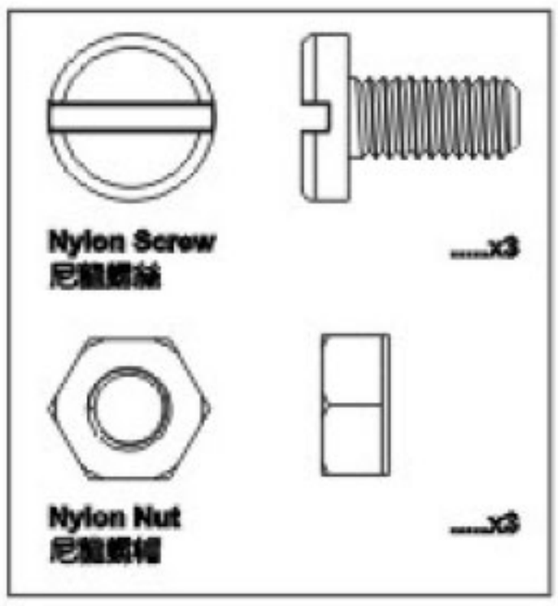

Step 2

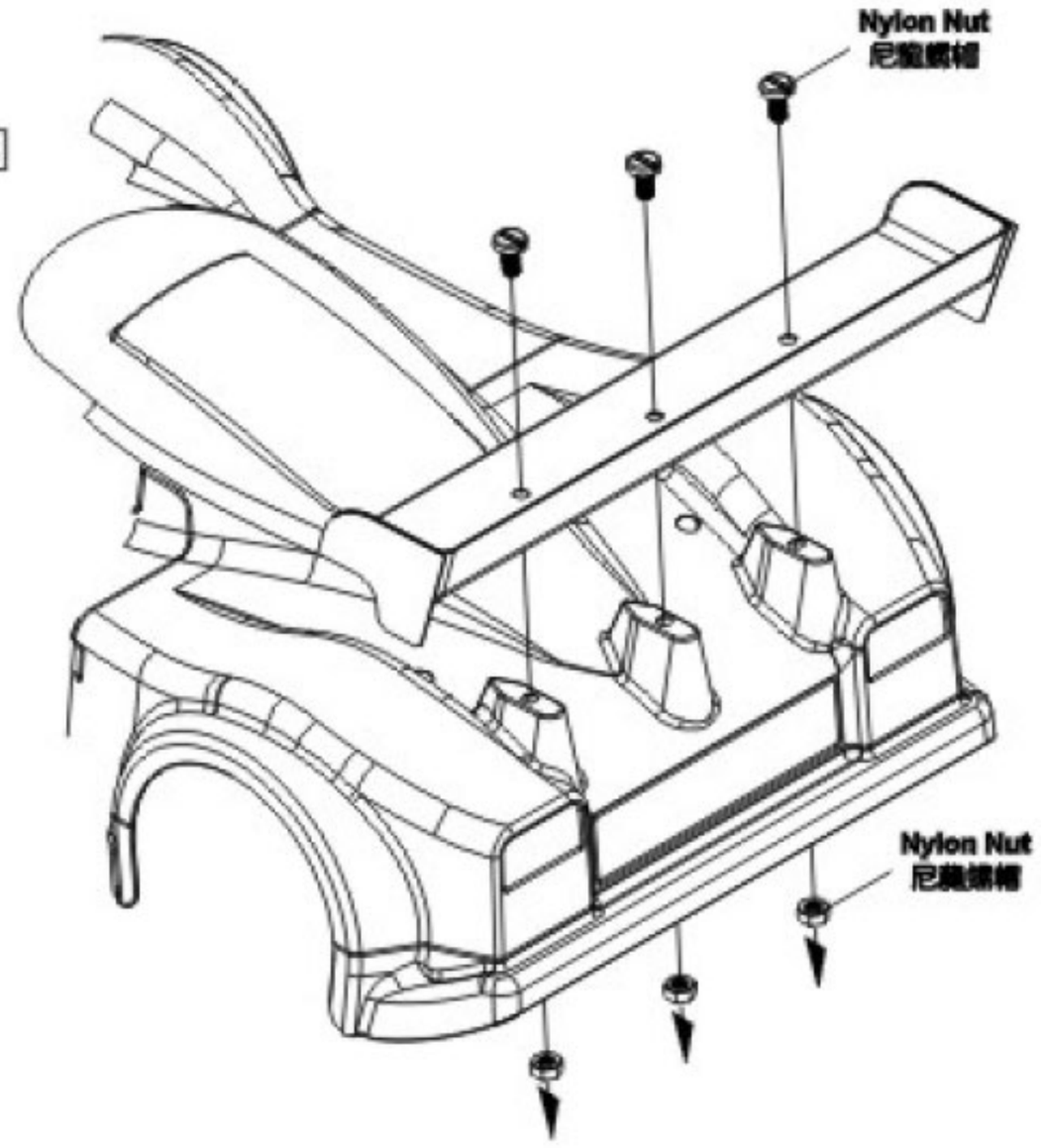

33 PASTE WITH BODY STICKERS TO OUTSIDE OF BODY
外觀貼紙貼於車殼上

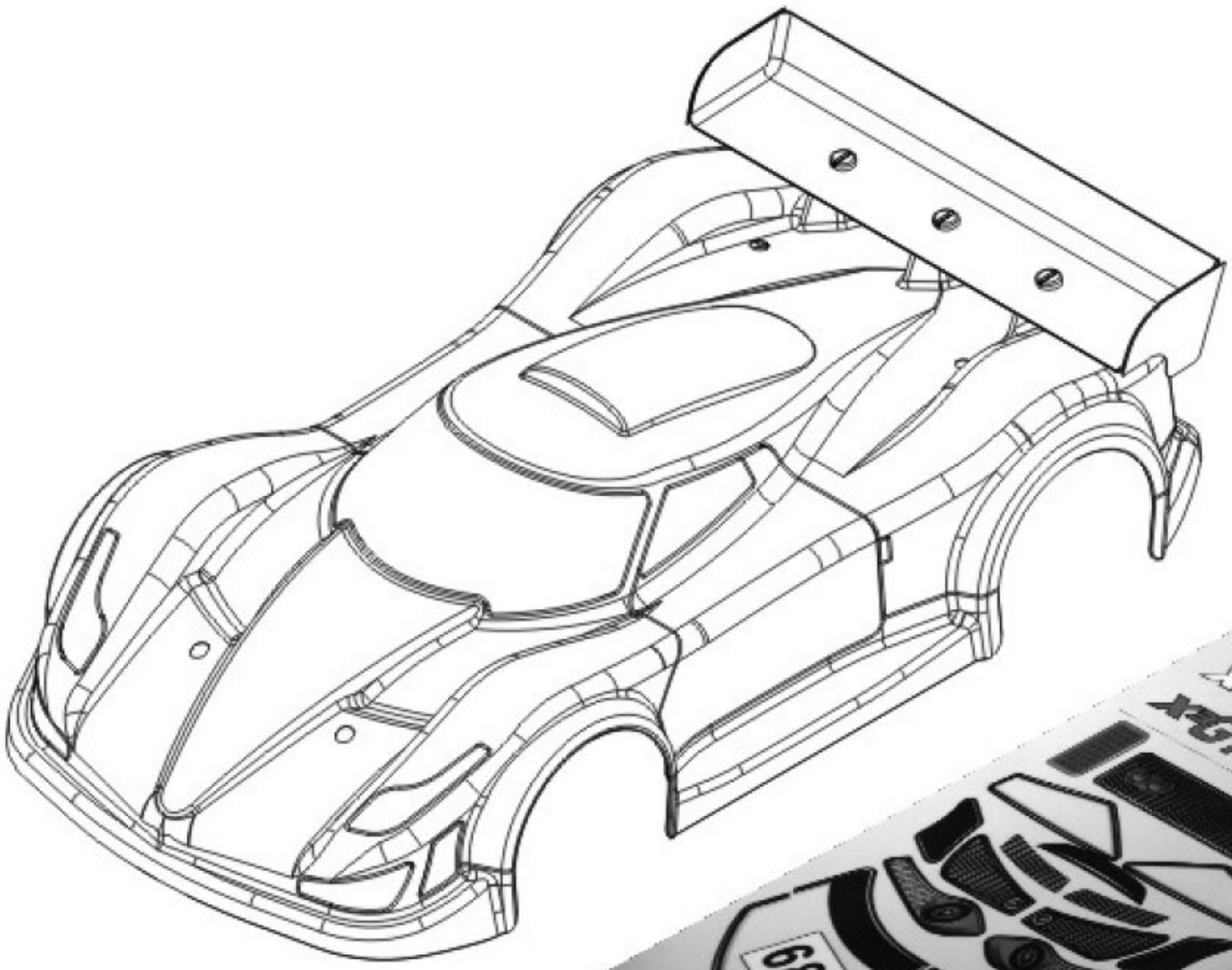

34 MOUNTING THE BODY SHELL
安裝車殼

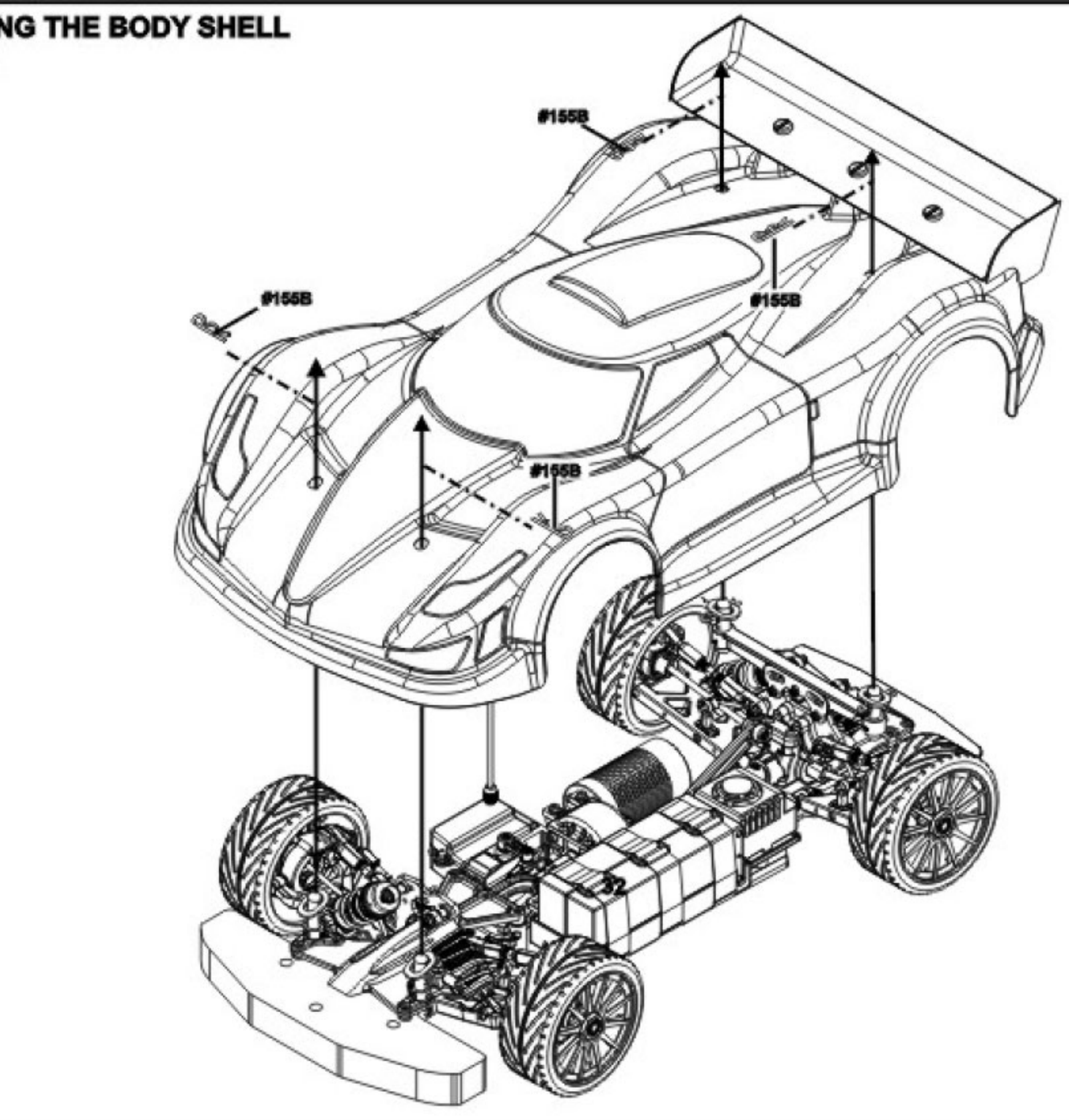

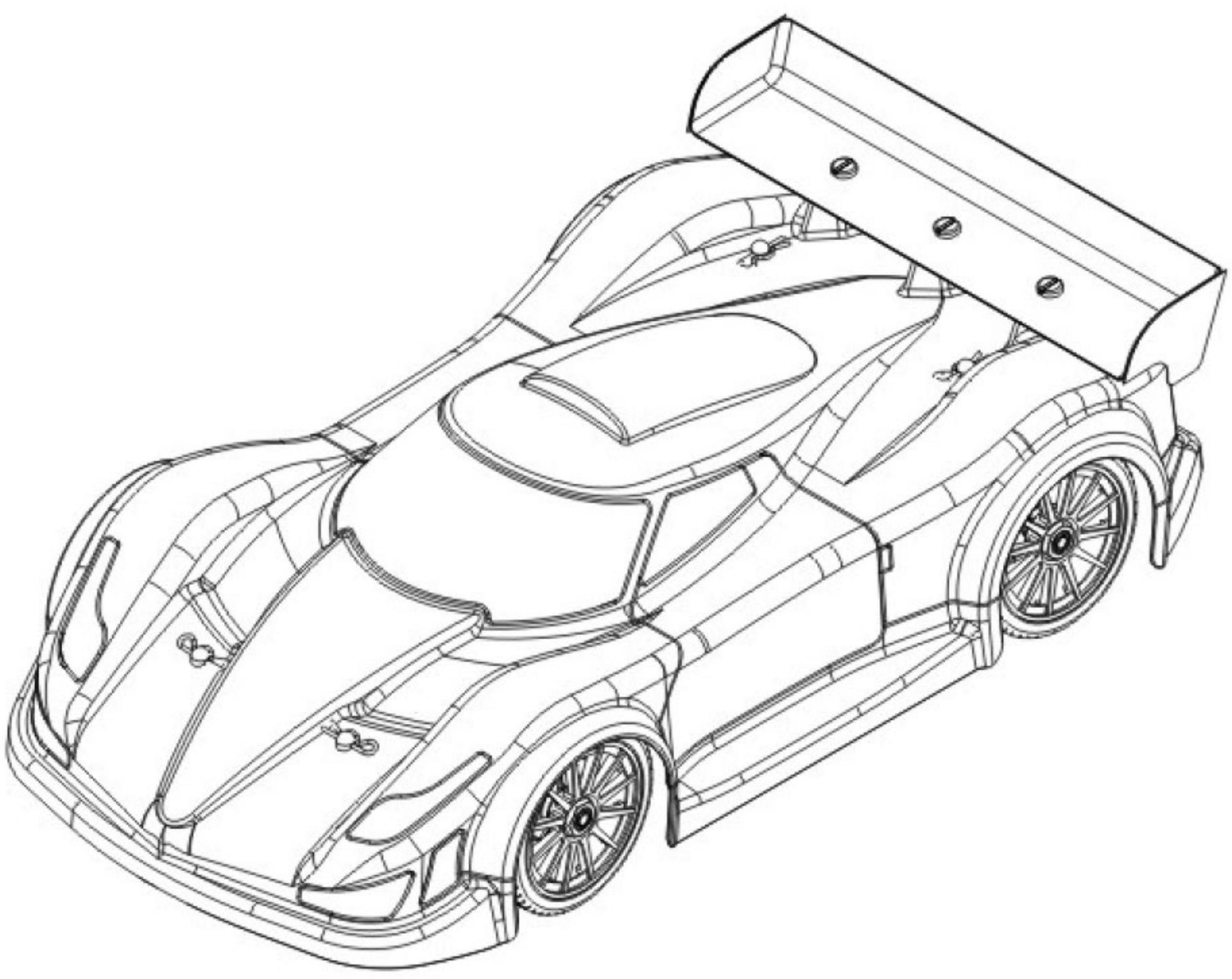

輪胎角度設定

前胎輪傾角調整

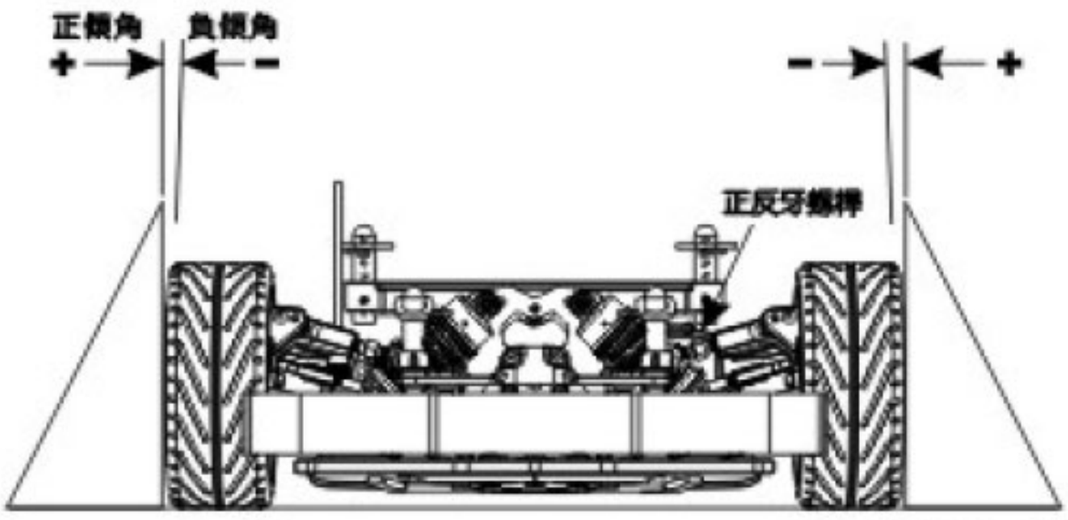

後胎輪傾角調整

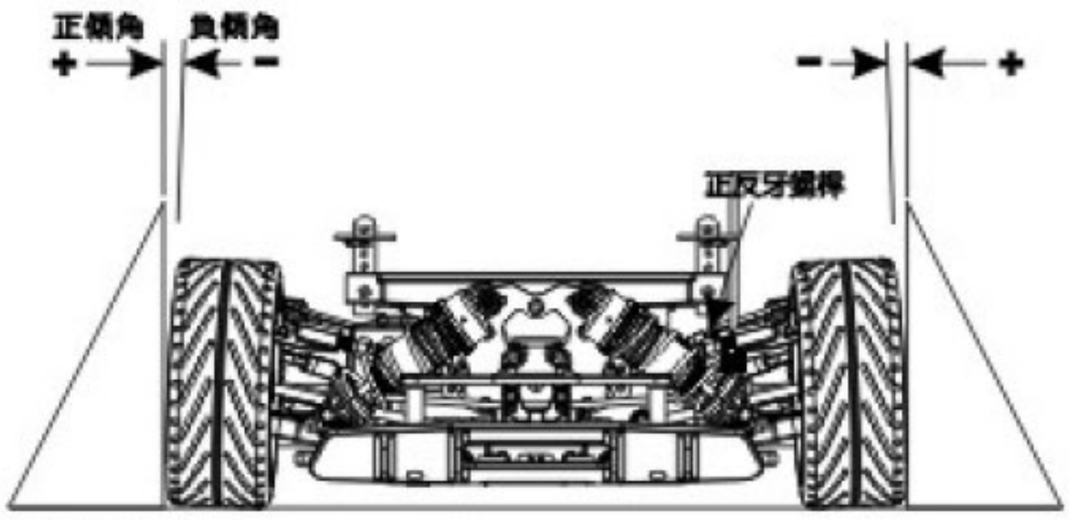

●將車體放置在平整桌面上並保持在正確離地高度，
調整上擺臂長度使輪胎與地面垂直(0度)。

●調整上擺臂"正反牙螺桿"長度可改變正負傾角設定。
加長上擺臂--傾角變為--正傾角.
縮短上擺臂--傾角變為--負傾角.

(我們建議前輪為0度, 後輪為負1.5度。)

前輪內束角／外束角 調整

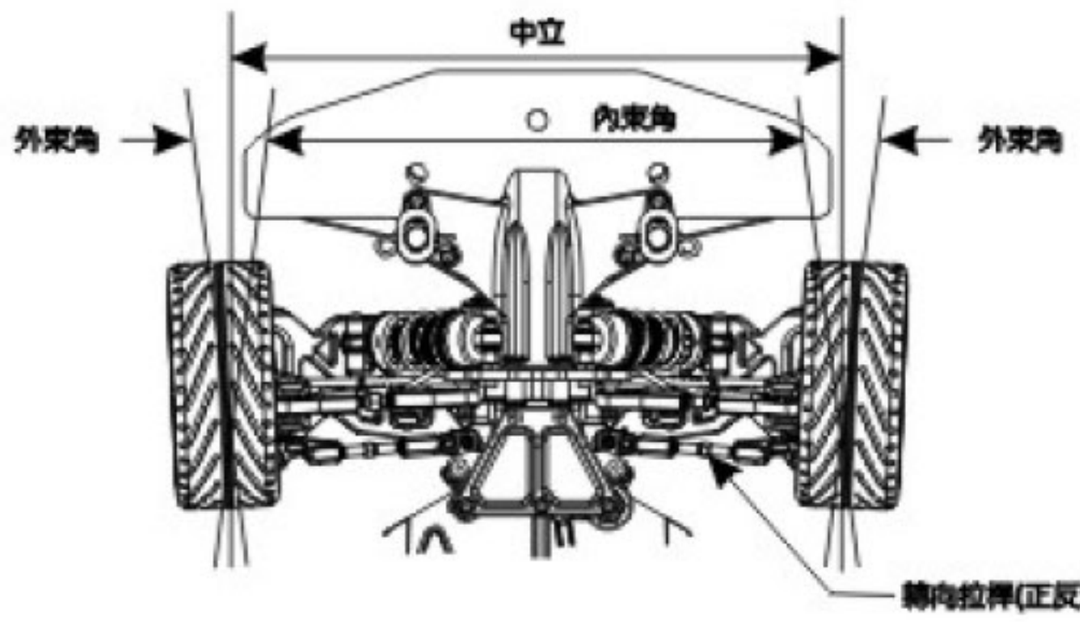

改變前輪轉向拉桿之長度可以改變前輪"內束角"與"外束角"。

1. 將前輪轉向拉桿加長，前輪會變成向內束角，此時轉向反應會變慢，並且有轉向過度情形產生。
2. 將前輪轉向拉桿縮短，前輪會變成向外束角，此時轉向反應會變快，並且有轉向不足情形產生。

後輪軸距

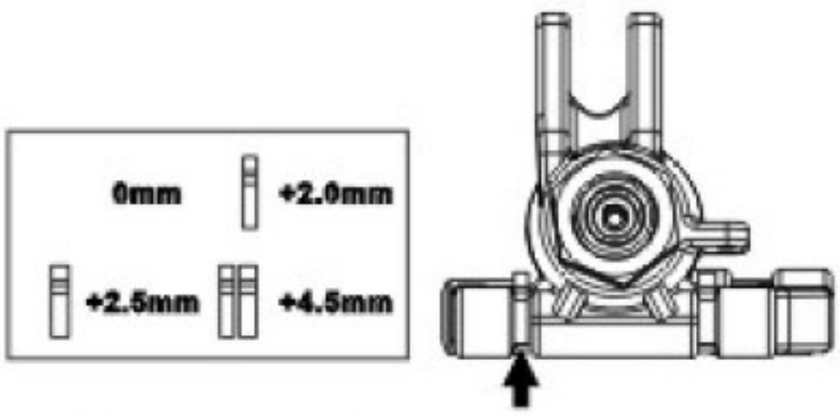

●透過使用在後輪座的墊扣來調整軸距。
●重要事項：後輪座左右邊的墊扣必須相同。

短軸距
在後輪座的前方減少墊扣。
—在加速時增加重心向後移動。
—油門開啟時增加extra力。
—油門關閉時轉向會過彎角較重載。
—油門開啟時出彎有較強的轉向不足。
—增加轉向反應。
—對於較急彎與技術性跑道有較好操控性。

長軸距
在後輪座的前方增加墊扣。
—減少加速時重心向後移動。
—增加行車穩定性。
—最初操控反應較慢(油門關閉時)。
—改善油門開啟時的出彎性。
—在不良起伏及凹凸路面有較好操控性。
—在較寬及高速彎角跑道有較好的控制性。

●油壓避震器會因安裝在不同位置, 而會使懸吊系統產生不同硬軟變化.
●油壓避震器配位置愈往車體中心,懸吊反應變軟. 前輪懸吊系統軟硬不同,
會產生不同轉向特性.
●油壓避震器按裝孔位,請依場地不同而調整在不同位置.

前油壓避震器角度調整

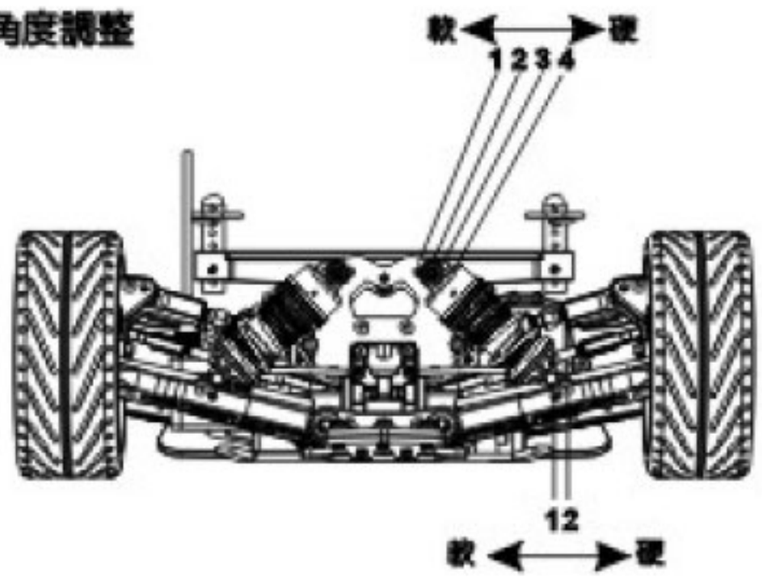

前輪硬-轉向不足
前輪軟-轉向過度

後油壓避震器角度調整

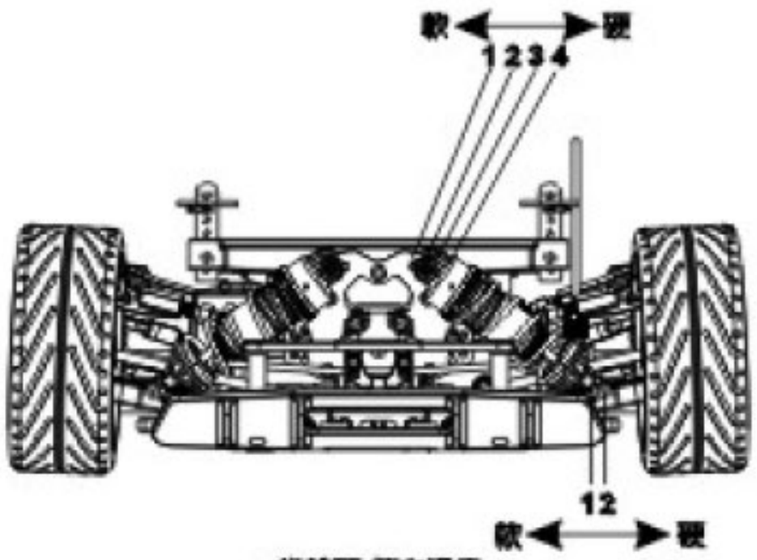

後輪硬-轉向過度
後輪軟-轉向不足

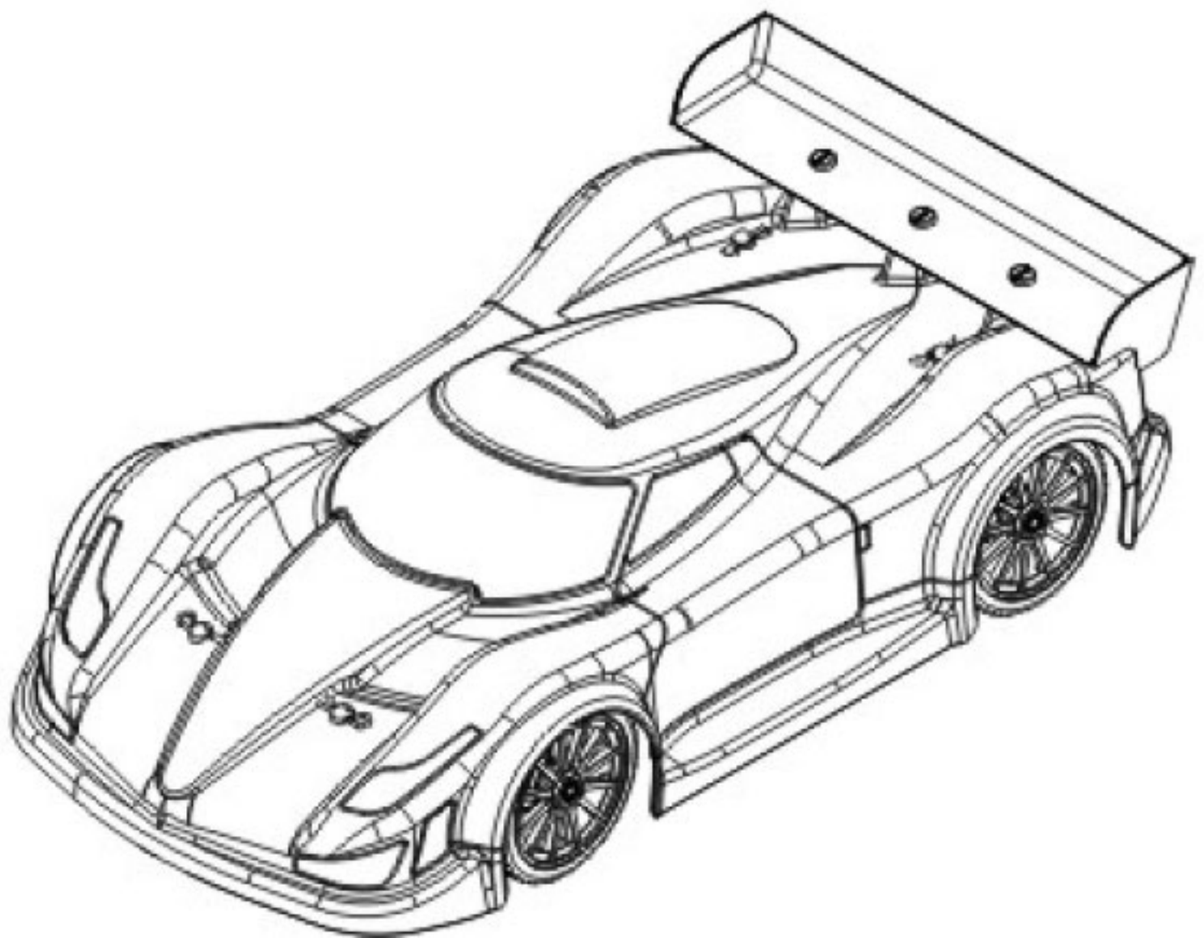

SETTING GUIDE

FRONT CAMBER ANGLE SETTING

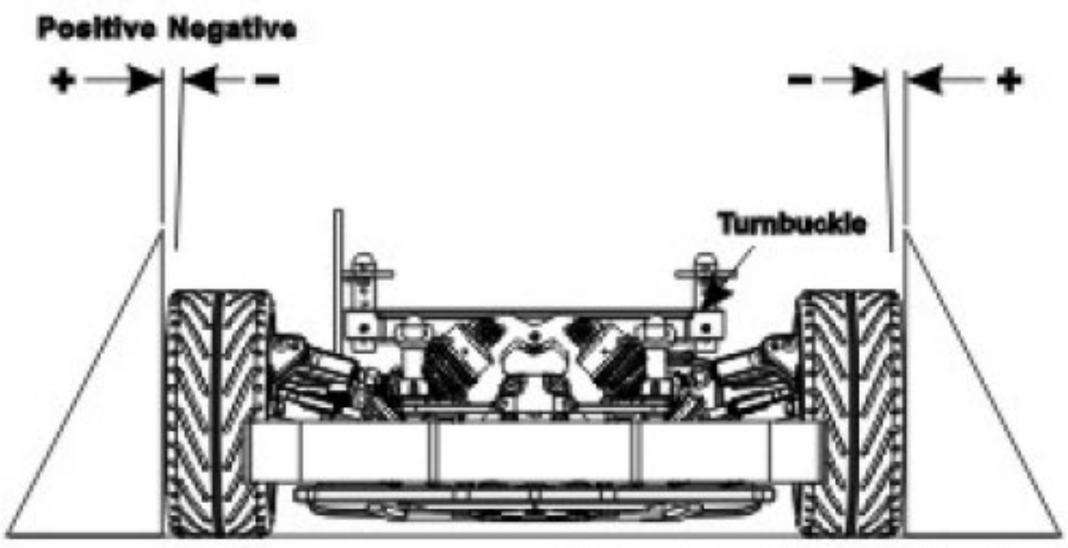

REAR CAMBER ANGLE SETTING

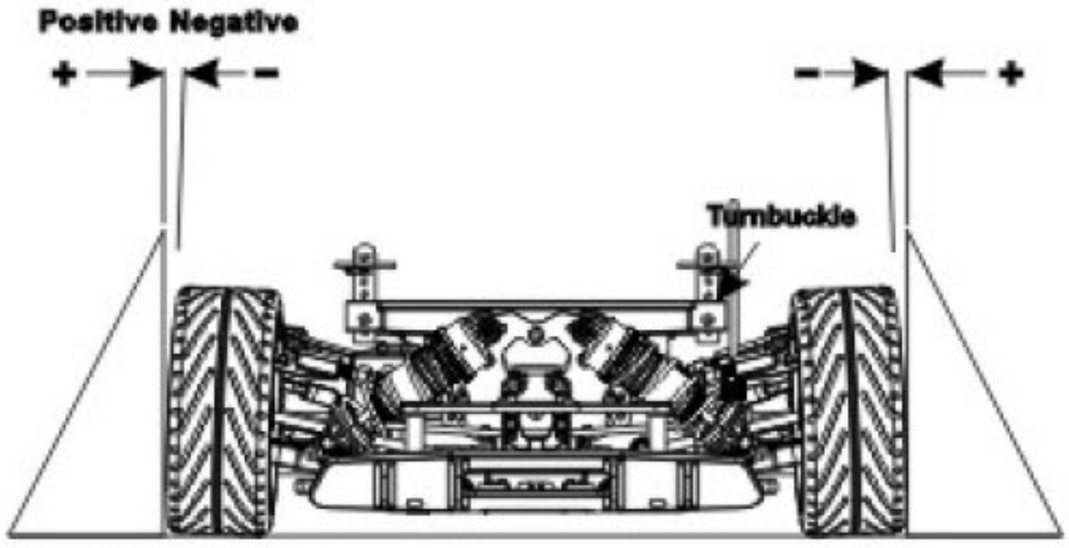

●Place the model car on flat surface. Raise the chassis to its maximum clearance before the wheels leave the ground.
●Adjust the length of the front and rear upper arms so that the wheels are vertical to the ground.
●Adjust the camber angle by turning the turnbuckle rod on the upper arms clockwise or anti-clockwise.
(We suggest to use zero degree for the front and 1.5 degree negative for the rear.)

FRONT TOE-IN AND TOE-OUT SETTING

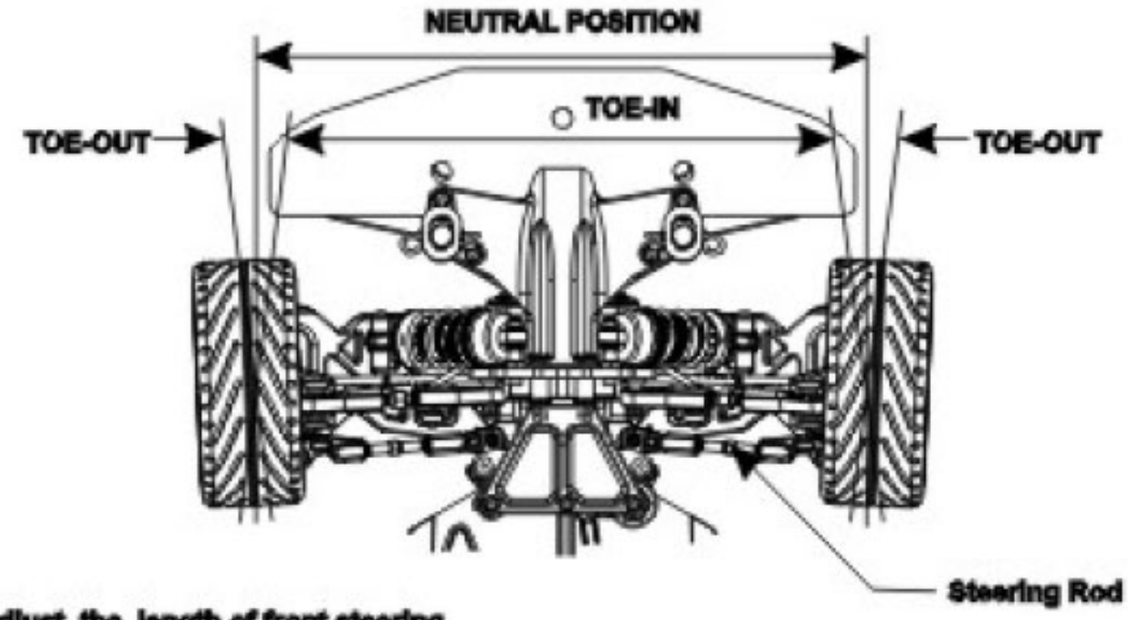

●Adjust the length of front steering rod to change the toe angle.
●Making the tie rod longer will make front tires toed in.
●Response will be slower and may over steer.
●Making the tie rod shorter will make front tires toed out.
●Response will be quicker and may under steer.

REAR WHEELBASE

Adjust the wheelbase by using the spacers on either side of the rear wheel hub (at the bottom pin).
IMPORTANT! Make equal adjustments on both left and right sides of the car.

Shorter wheelbase
less spacers in front of the rear wheel hub.
- increases rearward weight transfer during acceleration.
- increases on-power traction.
- quicker off-power steering into corners.
- slight tendency to push on-power at corner exit.
- increasee steering response.
- better on tighter, more technical tracks.

Longer wheelbase
more spacers in front of the rear wheel hub.
- decreases off-power steering into sharp corners.
- increasee stability.
- slower initial steering reaction (off-power).
- improves on-power steering at corner exit.
- better handling over bumps and ruts.
- better on more open tracks with high-speed corners.

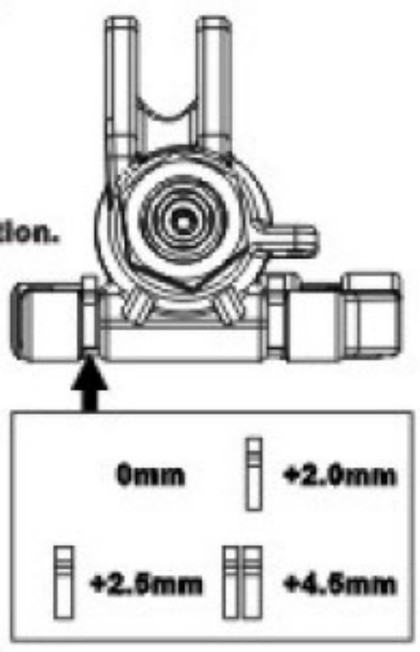

●Different shock positions will result in firmer or softer response of the suspension system.
●Install the shock in an inward angle will cause softer rebound. Softer or firmer suspension system will lead to different steering response.
●Adjust the shock angle positions according to track conditions.

FRONT SHOCK ANGLE SETTING

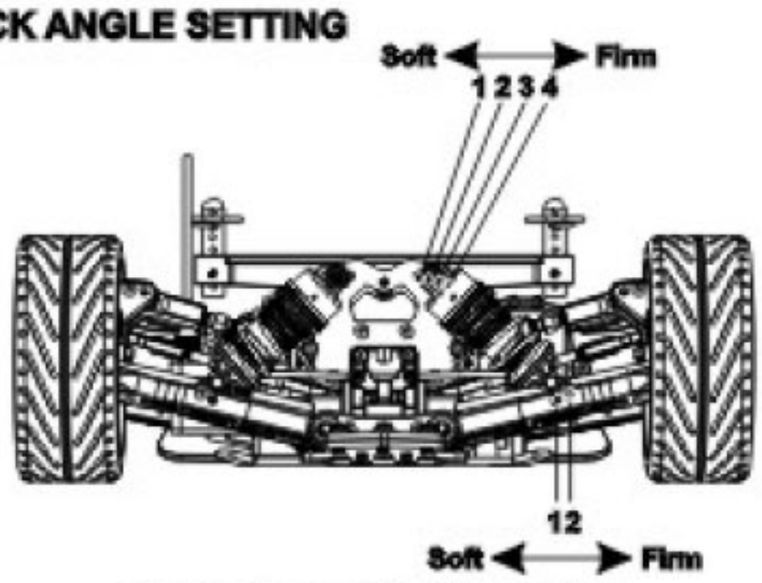

Firm front suspension, less steering.
Soft front suspension, more steering.

REAR SHOCK ANGLE SETTING

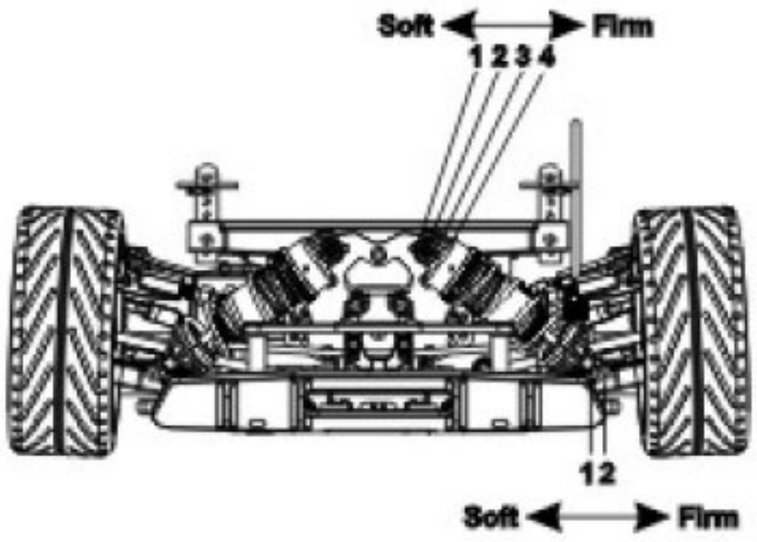

Firm rear suspension, over steering.
Soft rear suspension, under steering.

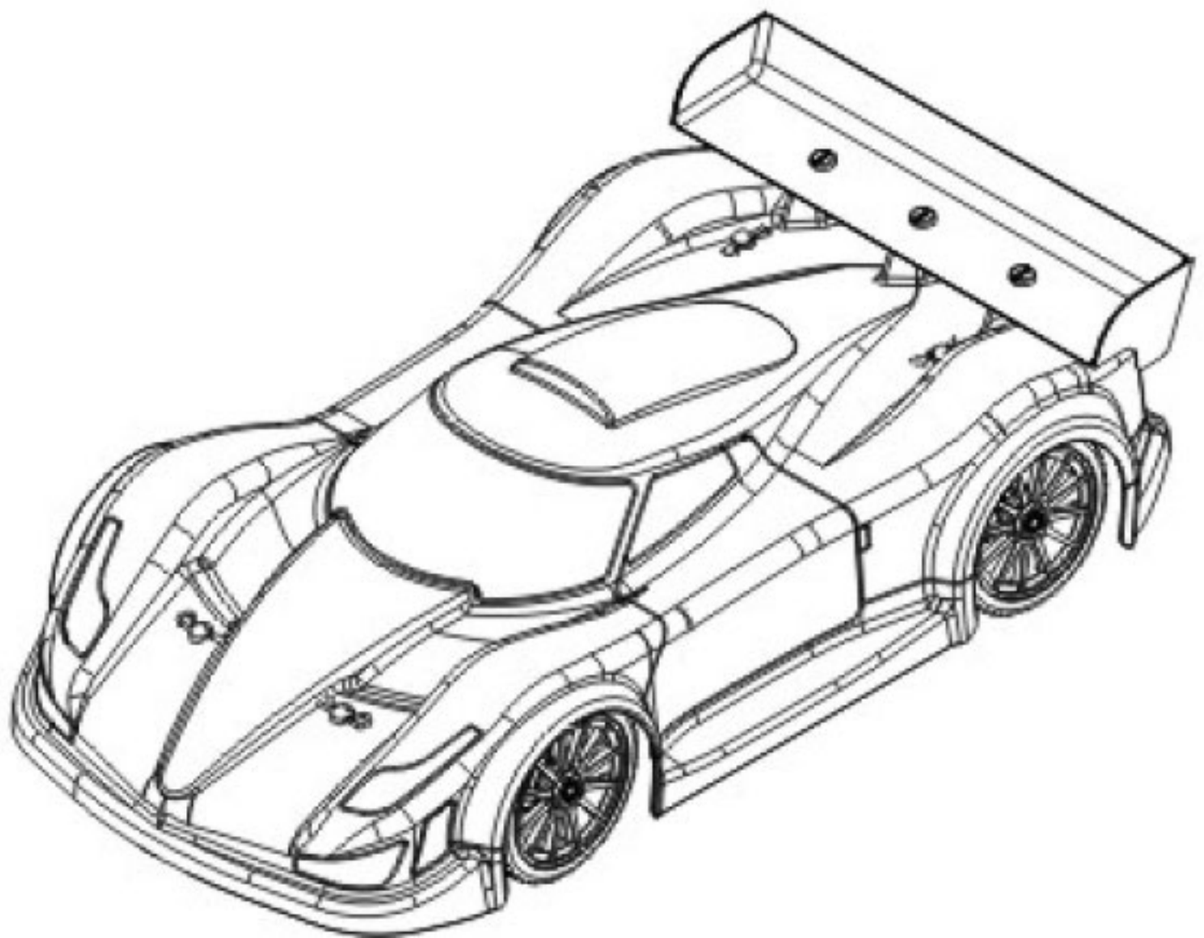

X3-SABRE-GT 電車版零件表

編號	品名	數量	編號	品名	數量
A-34B	防傾桿球型	2	X3-45	前下擺臂塑膠模 (L.R)	1set
A-41A	6mm 球形	6	X3-47	轉向座塑膠模 (L.R)	1set
A-47A	5x10x4 培林	2	X3-48	C型座塑膠模 (L.R)	1set
A-67A	避震軸心 (後)	2	X3-49	車殼柱/中支柱塑膠模	1set
A-87B	4mm十字軸心	2	X3-50	拉桿球頭塑膠模	1set
E-37	6mm球型座	6	X3-51	緩衝組/三角板塑膠模	1set
E-42	雙面膠帶	2	X3-53	後下擺臂塑膠模 (L.R)	1set
E-43	5x11x4 培林	8	X3-54	後輪座塑膠模 (L.R)	1set
G-13	小傘接杯	2	X3-59	伺服片塑膠模	1set
G-19	4x46 正反牙(黑)	4	X3-61	8x14 培林	4
G-25	7mm球型	6	X3-62	13x20 培林	4
G-26	5x35mm正反牙(黑)	2	X3-70	擺臂固定座塑膠模	1set
J-20	13x16x0.2 墊片(鋼)	4	X3-73	鋁合金3mm擺臂固定座(前)	1
JS-38B	8mm 剎車接杯	2	X3-76	後輪傳動軸(98㎜)	2
J-03A	P6 O環	2	X3-77	差速接杯	2
L-26	3x36 正反牙	2	X3-78	後輪軸	2
DM-18	海綿防撞板-V2	1	X3-82	前後防撞板模	1
DM-23	單段中軸	1	X3-83	三角板中差上蓋模	1
DM-31	中央大齒固定座	1	X3-84	車殼柱模	1
K-11A	伺服片轉接座	1set	X3-85	6061-T6 4mm 油壓架	1
X1-24	4mm 擺臂軸(73mm)	2	X3-87	6061 3mm 電車底盤	1
X1-26	8mm六角輪座(硬陽)	2	X3-88	前防傾桿2.8mm	1
X1-26A	六角螺帽(硬陽)	2	X3-89	後防傾桿2.8mm	1
X1-27	轉向襯套	4	X3-90	中央傳動軸, 90mm+106mm	1set
X1-31	一體式避震器上支座	1 set	X3S-25	蝸型大小傘齒 42T+14T	1 set
XT-22	避震器塑膠件	1 set	#155B	車殼插梢	4
X3-03	差速傘齒(粉末)10tx2 20tx2	1set	#264B	7mm錐形套	1
X3-04A	前CVD傳動軸107.5mm	2	#267D	8x16 培林	8
X3-06	CVD 結合軸 / 2.5 x12.8 滾針	4	#267E	2.5 x 16.8 滾針	4
X3-07	CVD輪軸	2	#294F	44T 大齒 (二段用)	1
X3-13	3.5 x 45.8 後輪座軸心	2	#304	GTP輪胎內海綿(2片式)	4set
X3-14	轉向座大王銷	4	#309B	正牙六角鋁螺帽	1
X3-15	擺臂襯套	4	#387A	16mm外牙筒身(後)	2
X3-16	緩衝組支柱	2	#387C	16mm避震器上蓋(硬陽)	4
X3-17	緩衝組鋁管	1	#387D	16mm避震器調整環(硬陽)	4
X3-18	緩衝組彈簧	1	#387F	19x1.5mm O環	4
X3-19	緩衝組調整O環 /12 x 1.7 O環	1set	#387G	彈簧止座塑膠模	1set
X3-20	緩衝組連接板 B	1	#387P	16mm避震器活塞模	1set
X3-21	緩衝組調簧調整螺絲	2	#387S	16mm避震器修理包	1set
X3-22	緩衝組襯套	2	#388	16mm避震器用氣室 桔色	4
X3-25	煞車凸軸	2	#395	接收机盒/中差板/電池盒塑膠模	1 set
X3-28	煞車伺服桿彈簧	2	#396	電池固定帶(魔鬼粘)	3
X3-31	7x8.5mm球型座	4	#397-18	18T馬達齒 5mm軸 , M1	1
X3-32	7x12mm球型座	4	#364-BR	天線管固定螺帽(BR)	1
X3-33	4mm 內六角球型座	2	#415	鋁CNC馬達座 (二件式)	1set
X3-34	2.5x11.8 滾針	10	#416	16mm GT避震器彈簧組, 2.3mm	1set
X3-35	2.5 x12.8 滾針	10	#418A	前避震軸心, 45mm	2
X3-38	差速器防漏墊片 31x20x0.3	3	#418B	16mm外牙筒身(前)	2
X3-40	4x10 圓頭止付	4	#419-BK	12爪框 (黑)	4
X3-43	差速殼	1	#420	GT 車殼 (透明)	1
X3-44	差速箱塑膠模	1set	BT-110	1/8像真胎	4

X3-SABRE-GT Electric Parts List

Part No.	Description	Q'TY	Part No.	Description	Q'TY
A-34B	Stabilizer Ball End	2	X3-45	Front Lower Arms L,R	1
A-41A	6mm Ball	6	X3-47	Steering Knuckle Arm L,R	1
A-47A	Bearing 5X10X4	2	X3-48	Front C Hub L,R	1
A-67A	Shock Shaft (rear)	2	X3-49	Body Post/Center Brace	1
A-87B	4mm Cross Pin	2	X3-50	Plastic Rod End	1
E-37	6mm Ball & Socket	6	X3-51	Servo Saver Set/Front Top Deck	1
E-42	Double-side Tape	2	X3-53	Rear Lower Arms L,R	1
E-43	5x11x4 Ball Bearing	8	X3-54	Rear Hub L.R	1
G-13	Cap Joint	2	X3-59	Throttle/Steering Level Set	1
G-19	4x46 Turnbuckle	4	X3-61	8x14 Ball Bearing	4
G-25	7mm Ball	6	X3-62	13x20 Ball Bearing	4
G-26	5x35 Turnbuckle	2	X3-70	Arms Holder, Plastic	1set
J-03A	P-6 O-Ring	2	X3-73	6061 Suspension Bracket FF	1
J-20	Diff Bevel Gear Shim 13x16x0.2mm	4	X3-76	Rear Drive Shaft(98mm)	2
JS-38B	8mm Cap Joint for Brake	2	X3-77	Cap Joint for Diff.	2
L-26	3x36mm Turnbuckle	2	X3-78	Rear Drive Shaft	2
DM-18	Foam Bumper	1	X3-82	Front, Rear Bumper	1
DM-23	Single Gear Shaft	1	X3-83	Front Top Deck/Cen. Top	1
DM-31	Centre Gear Mount	1	X3-84	Body Post	1
K-11A	Insert for Servo Saver	1set	X3-85	6061-4mm Shock Tower	1
X1-24	Front, Rear Lower Arm Shaft (4x73)	2	X3-87	6061- 3mm Chassis for Electric	1
X1-26	Alum. Wheel Hub	2	X3-88	Front Anti-roll Bar 2.8mm	1
X1-26A	Alum. Wheel Nut	2	X3-89	Rear Anti-roll Bar 2.8mm	1
X1-27	Knuckle Arm Bushing	4	X3-90	Center Driver Shaft,90mm/106mm	1 set
X1-31	Shock Ball End Post	4	X3S-25	Spiral Bevel Gear (42T+14T)	1set
XT-22	Plastic Shock Parts Set	1	#155B	Body Clips	1set
X3-03	Diff. Gear 10Tx4, 20Tx2	1set	#264B	Taper Cone 7mm Brass	1
X3-04A	Front CVD Drive Shaft 107.5mm	2	#267D	8x16 Ball Bearing	8
X3-06	Drive Shaft Insert, 2.5 x12.8 Pin	4	#267E	2.5 x 16.8 Pin	4
X3-07	CVD Wheel Axle	2	#294F	44T 2nd Spur Gear	1
X3-13	3.5 x 45.8 Rear Hub Shaft	2	#304	sponge for radial tire(L&S)	4 pcs
X3-14	Steering King Pin	4	#309B	Alum. Nut (clockwise)	1
X3-15	Front Arm Bushing	4	#387A	16mm Rear Shock Body	pair
X3-16	Servo Saver Post	2	#387C	16mm shock Cap	4
X3-17	Alum. Servo Saver Tube	1	#387D	16mm Shock Spring Adjuster	4
X3-18	Servo Saver Spring	1	#387F	19 x 1.5mm O-Ring	4
X3-19	Servo Saver Adjuster Oring	1set	#387G	Plastic Shock Spring Holder	1set
X3-20	Servo Saver Connecting Plate B	1	#387P	16mm Shock Piston	8
X3-21	Servo Saver Screws	2	#387S	Repair Kit for #387	1set
X3-22	Servo Saver Bushing	2	#388	16mm Pressure Top (Orange)	4
X3-25	Brake Cam	2	#364-BR	Antenna Pipe Fixing Nut	1
X3-28	Brake Rod Spring	2	#395	Receiver Box/Top Plate/Battery Case	1 set
X3-31	7x8.5mm Ball & Socket	4	#396	Velcro Battery Straps (Black)	3 pcs
X3-32	7x12mm Ball & Socket	4	#397-18	18T Pinion Gear 5mm, M1	1
X3-33	Hex 4mm Ball & Socket	2	#415	CNC 2 pcs Motor Mount	1 set
X3-34	2.5x11.8 Pins	10	#416	16mm GT Shock Spring Set, 2.3mm	1set
X3-35	2.5 x12.8 Pins	10	#418A	Shock Shaft, front, 45mm	2
X3-38	Diff Gasket 31x20x0.3	3	#418B	16mm Front Shock Body	pair
X3-40	4x10 Round Head Set Screw	4	#419-BK	12 Spoke Wheel, Black	4pcs
X3-43	Diff. Case (F&R)	1	#420	X3 GT Body, clear	1
X3-44	Gear Case	1	BT-110	1/8 Radial Tire	pair

HongNor

鴻諾企業有限公司

HONG NOR ENTERPRISE CO.,LTD.

5F NO.181-2, CHUNG HSING ROAD,
HSICHIH CITY, TAIPEI HSIEN,
TAIWAN, R.O.C.
TEL: 886 2-2694-0345
FAX: 886 2-2694-1632

www.hongnor-racing.com